The City of Morgantown

Linda L. Little, CMC
389 Spruce Street, Room 10
Morgantown, West Virginia 26505
(304) 284-7439 Fax: (304) 284-7525
llittle@cityofmorgantown.org

Office of the City Clerk

AGENDA
MORGANTOWN CITY COUNCIL
REGULAR MEETING
October 15, 2013
7:00 p.m.

1. **CALL TO ORDER**

2. **ROLL CALL**

3. **PLEDGE TO THE FLAG**

4. **APPROVAL OF MINUTES: Special & Regular Meetings – October 1, 2013**

5. **CORRESPONDENCE**

6. **PUBLIC HEARING:**

   A. **PUBLIC HEARING** on **AN ORDINANCE AMENDING SECTION 925.03 OF THE CITY OF MORGANTOWN'S STREETS, UTILITIES AND PUBLIC SERVICES CODE BY SETTING FORTH THE RATES, FEES AND CHARGES FOR SERVICE TO CUSTOMERS OF THE SEWERAGE SYSTEM OF THE CITY.**

   B. **PUBLIC HEARING** on **AN ORDINANCE AUTHORIZING THE ACQUISITION AND CONSTRUCTION OF EXTENSION, ADDITIONS, BETTERMENTS AND IMPROVEMENTS TO THE WASTEWATER PORTION OF THE EXISTING PUBLIC COMBINED WATERWORKS, SEWERAGE AND STORMWATER SYSTEM OF THE CITY OF MORGANTOWN AND THE FINANCING OF THE COST, NOT OTHERWISE PROVIDED, THEREOF THROUGH THE ISSUANCE BY THE CITY OF NOT MORE THAN $1,250,000 IN AGGREGATE PRINCIPAL AMOUNT OF COMBINED UTILITY SYSTEM REVENUE BONDS, SERIES 2014 A (WEST VIRGINIA SRF PROGRAM); PROVIDING FOR THE RIGHTS AND REMEDIES OF AND SECURITY FOR THE REGISTERED OWNERS OF SUCH BONDS; AUTHORIZING EXECUTION AND DELIVERY OF ALL DOCUMENTS RELATING TO THE ISSUANCE OF SUCH BONDS; APPROVING,**

RATIFYING AND CONFIRMING A BOND PURCHASE AGREEMENT RELATING TO THE BONDS; AUTHORIZING THE SALE AND PROVIDING FOR THE TERMS AND PROVISIONS OF SUCH BONDS AND ADOPTING OTHER PROVISIONS RELATING THERETO.

6. **UNFINISHED BUSINESS:**

A. Consideration of **APPROVAL** of **SECOND READING (ADOPTION)** of **AN ORDINANCE AMENDING SECTION 925.03 OF THE CITY OF MORGANTOWN'S STREETS, UTILITIES AND PUBLIC SERVICES CODE BY SETTING FORTH THE RATES, FEES AND CHARGES FOR SERVICE TO CUSTOMERS OF THE SEWERAGE SYSTEM OF THE CITY. (First Reading on 9/15/2013)**

B. Consideration of **APPROVAL** of **SECOND READING (ADOPTION)** of **AN ORDINANCE AUTHORIZING THE ACQUISITION AND CONSTRUCTION OF EXTENSION, ADDITIONS, BETTERMENTS AND IMPROVEMENTS TO THE WASTEWATER PORTION OF THE EXISTING PUBLIC COMBINED WATERWORKS, SEWERAGE AND STORMWATER SYSTEM OF THE CITY OF MORGANTOWN AND THE FINANCING OF THE COST, NOT OTHERWISE PROVIDED, THEREOF THROUGH THE ISSUANCE BY THE CITY OF NOT MORE THAN $1,250,000 IN AGGREGATE PRINCIPAL AMOUNT OF COMBINED UTILITY SYSTEM REVENUE BONDS, SERIES 2014 A (WEST VIRGINIA SRF PROGRAM); PROVIDING FOR THE RIGHTS AND REMEDIES OF AND SECURITY FOR THE REGISTERED OWNERS OF SUCH BONDS; AUTHORIZING EXECUTION AND DELIVERY OF ALL DOCUMENTS RELATING TO THE ISSUANCE OF SUCH BONDS; APPROVING, RATIFYING AND CONFIRMING A BOND PURCHASE AGREEMENT RELATING TO THE BONDS; AUTHORIZING THE SALE AND PROVIDING FOR THE TERMS AND PROVISIONS OF SUCH BONDS AND ADOPTING OTHER PROVISIONS RELATING THERETO. (First Reading on 9/15/2013)**

C. **BOARDS AND COMMISSIONS**

7. **PUBLIC PORTION WHICH SHALL BE SUBJECT TO RULES ESTABLISHED BY COUNCIL AND ADOPTED BY RESOLUTION**

8. **SPECIAL COMMITTEE REPORTS**

9. **NEW BUSINESS:**

A. Consideration of **APPROVAL** of **FIRST READING** of **AN ORDINANCE BY THE CITY OF MORGANTOWN AUTHORIZING IT, AS LESSOR, TO LEASE SPACE AT THE FORMER WOODBURN SCHOOL, NOW OWNED BY THE CITY, TO THE WEST VIRGINIA UNIVERSITY BOARD OF GOVERNORS, LESSEE, FOR USE BY THE WVU COLLEGE OF CREATIVE ARTS, SCHOOL OF ART DESIGN, CERAMICS DEPARTMENT.**

B. Consideration of **APPROVAL** of **FIRST READING** of **AN ORDINANCE BY THE CITY OF MORGANTOWN AUTHORIZING IT, AS LESSOR, TO LEASE SPACE AT THE FORMER WOODBURN SCHOOL, NOW OWNED BY THE CITY, TO THE MOUNTAINEER BOYS AND GIRLS CLUB, INC., LESSEE.**

10. CITY MANAGER'S REPORT:

NEW BUSINESS:

1. **Agreement with Tamarack for the Sale of Products at the Morgantown Municipal Airport.**
2. **Renewal of the City's Group Health Plan.**

11. REPORT FROM CITY CLERK

12. REPORT FROM CITY ATTORNEY

13. REPORT FROM COUNCIL MEMBERS

14. ADJOURNMENT

If you need an accommodation contact us at (304) 284-7439

SPECIAL MEETING OCTOBER 1, 2013:

The special meeting of the Common Council of the City of Morgantown was held in the Council Chambers on Tuesday, October 1, 2013 at 6:00 p.m.

PRESENT: Mayor Jenny Selin, and Council Members, Ron Bane, Bill Kawecki, Wes Nugent, Marti Shamberger, Mike Fike, Nancy Ganz and City Clerk Linda Little.

The meeting was called to order by Mayor Selin.

INTERVIEWS TO FILL ONE VACANCY ON THE BOPARC BOARD:

Council Members interviewed two of the five applicants: William Rochinich and Sera Zegra (Nadine Kelly withdrew and Meghan Smith, Victoria Crowder and Matthew Shreve were absent) Questions were posed to the candidates who applied to fill the vacancy.

Following the interviews, council moved into executive session in order to discuss the results of the interviews and make a determination on which applicant will be chosen to serve the Board.

EXECUTIVE SESSION:

Motion by Councilor Bane, second by Councilor Nugent, to go into executive session pursuant to Section 6-9A-4(b)-2(A) of the West Virginia Code in order to discuss personnel matters with the following persons present; Mayor Selin, and Council Members. Time 6:40 pm

ADJOURNMENT:

There being no further business, Council adjourned the special meeting at 6:55 pm.

City Clerk

Mayor

***A FULL TRANSCRIPT OF ALL COUNCIL MEETINGS IS AVAILABLE ON CD AT THE MORGANTOWN CITY LIBRARY.**

REGULAR MEETING, OCTOBER 1, 2013: The regular meeting of the Common Council of the City of Morgantown was held in the Council Chambers of City Hall on Tuesday, October 1, 2013 at 7:00 P.M.

PRESENT: City Manager Jeff Mikorski, Assistant City Manager of Operations Glen Kelly, City Attorney Steve Fanok, City Clerk Linda Little, Mayor Jenny Selin and Council Members: Ron Bane, Bill Kawecki, Wes Nugent, Marti Shamberger, Mike Fike and Nancy Ganz.

APPROVAL OF MINUTES: The minutes of the Regular Meeting of September 17, 2013 was approved as presented.

CORRESPONDENCE: Mayor Selin suspended the rules to allow Ron Justice speak about the stormwater management issues at the College Park development. Mr. Justice thanked Council for the opportunity to discuss the issue, and introduced Brian Lemme, a stormwater management engineer. Mr. Lemme addressed Council about the stormwater runoff from the construction site on Willey Street. He informed Council that the "Construction Stormwater Inspection" report on August 12, showed that controls are in place and being monitored. Discussion among Council was entertained after his explanation, and more questions were answered.

PUBLIC HEARING – AN ORDINANCE AMENDING THE OFFICIAL ZONING MAP OF THE CITY OF MORGANTOWN TO ESTABLISH A B-2 SERVICE BUSINESS DISTRICT ZONING CLASSIFICATION FOR CERTAIN REALTY ANNEXED INTO THE CITY BY ORDINANCE ON MAY 21, 2013 AS SHOWN ON THE EXHIBIT HERETO ATTACHED AND DECLARED TO BE A PART OF THIS ORDINANCE AS IF THE SAME WAS FULLY SET FORTH HEREIN.

There being no appearances, Mayor Selin declared the public hearing closed.

UNFINISHED BUSINESS:

AN ORDINANCE AMENDING ZONING MAP, ESTABLISHING A B-2 DISTRICT FOR ANNEXED REALTY: The below entitled Ordinance was presented for second reading:

AN ORDINANCE AMENDING THE OFFICIAL ZONING MAP OF THE CITY OF MORGANTOWN TO ESTABLISH A B-2 SERVICE BUSINESS DISTRICT ZONING CLASSIFICATION FOR CERTAIN REALTY ANNEXED INTO THE CITY BY ORDINANCE ON MAY 21, 2013 AS SHOWN ON THE EXHIBIT HERETO ATTACHED AND DECLARED TO BE A PART OF THIS ORDINANCE AS IF THE SAME WAS FULLY SET FORTH HEREIN.

Motion by Bane, second by Shamberger to adopt the above entitled Ordinance. After explanation from City Manager Jeff Mikorski, motion carried 7-0.

BOARDS AND COMMISSIONS: By acclamation of Council, Sera Zegre was appointed to BOPARC to fill the vacancy.

PUBLIC PORTION:

Susan McDonald, 911 Fairfax Drive, President of Evansdale Neighborhood Association, discussed impacts of the WVU smoking ban on residents of the neighborhood areas directly abutting private home property. She reported that students and employees are still smoking in front of homes due to the ban and littering butts. She also commented on the annulments approved, and hoped that the Council would withhold approval of those as leverage to bargain with WVU about pedestrian crossings along University Blvd.

Ron Justice, 741 Johnson Avenue, on behalf of WVU, addressed the concerns of Ms. McDonald stating that smoking bins have been placed, and they continue to work on the issue. He added that pedestrian concerns are paramount and noted that they will work together to improve safety. He discussed the football weekend and the reduction of incidents and announced a cleanup event.

Christopher Grant, 430 Brockway Avenue, pointed out that when smoking and crime issues are discussed there is a discrepancy between what areas are designated as public property vs. school property. He also noted that it would benefit the City and WVU to step back and evaluate responsibilities of each entity before property developments are initiated. He feels that WVU should maintain its current facilities before breaking new ground. He asked Council to be vigilant in watching the University.

James Gordon, 233 Jones Avenue, discussed traffic issues and lack of stop signs in his neighborhood. He asked that new signs be dedicated to the upper Sunnyside area.

Zack Nagel, 474 Winsley Street, expressed issues he has been having with parking permits in his area. He stated that the parking hours on the permit are counter intuitive, and that when he works late, there are no spaces available as those without permits are parked in his designated area, yet he has been issued tickets before for parking with his permit at his home.

There being no other appearances, Mayor Selin declared the public portion closed.

SPECIAL COMMITTEE REPORTS: No reports.

NEW BUSINESS:

AN ORDINANCE SETTING FORTH RATES, FEES AND CHARGES FOR SERVICE TO CUSTOMERS OF THE CITY'S SEWERAGE SYSTEM (SUNSHINE ESTATES ACQUISITION): The below entitled Ordinance was presented for first reading:

AN ORDINANCE AMENDING SECTION 925.03 OF THE CITY OF MORGANTOWN'S STREETS, UTILITIES AND PUBLIC SERVICES CODE BY SETTING FORTH THE RATES, FEES AND CHARGES FOR SERVICE TO CUSTOMERS OF THE SEWERAGE SYSTEM OF THE CITY OF MORGANTOWN.

Motion by Bane, second by Shamberger to pass the above entitled Ordinance to second reading. City Manager Jeff Mikorski explained the Ordinance and the rules were suspended to allow additional commentary from MUB Director Tim Ball. After discussion, motion carried 7-0.

AN ORDINANCE AUTHORIZING COMBINED UTILITY SYSTEM REVENUE BONDS, SERIES 2014 A, FOR ACQUISITION OF THE SUNSHINE ESTATES SEWERAGE SYSTEM: The below entitled Ordinance was presented for first reading:

AN ORDINANCE AUTHORIZING THE ACQUISITION AND CONSTRUCTION OF EXTENSION, ADDITIONS, BETTERMENTS AND IMPROVEMENTS TO THE WASTEWATER PORTION OF THE EXISTING PUBLIC COMBINED WATERWORKS, SEWERAGE AND STORMWATER SYSTEM OF THE CITY OF MORGANTOWN AND THE FINANCING OF THE COST, NOT OTHERWISE PROVIDED, THEREOF THROUGH THE ISSUANCE BY THE CITY OF NOT MORE THAN $1,250,000 IN AGGREGATE PRINCIPAL AMOUNT OF COMBINED UTILITY SYSTEM REVENUE BONDS, SERIES 2014 A (WEST VIRGINIA SRF PROGRAM); PROVIDING FOR THE RIGHTS AND REMEDIES OF AND SECURITY FOR THE REGISTERED OWNERS OF SUCH BONDS; AUTHORIZING EXECUTION AND DELIVERY OF ALL DOCUMENTS RELATING TO THE ISSUANCE OF SUCH BONDS; APPROVING, RATIFYING AND

CONFIRMING A BOND PURCHASE AGREEMENT RELATING TO THE BONDS; AUTHORIZING THE SALE AND PROVIDING FOR THE TERMS AND PROVISIONS OF SUCH BONDS AND ADOPTING OTHER PROVISIONS RELATING THERETO.

Motion by Shamberger, second by Fike, to pass the above entitled Ordinance to second reading. Motion carried 7-0.

CITY MANAGERS REPORT:

NEW BUSINESS:

1. Airport Recommendations for Award of Construction on Terminal Improvements

   After explanation, motion by Ganz, second by Bane, to award the terminal improvements construction project to Kalkreuth Roofing and Sheet Metal, Inc. for $1,196,161. Motion carried 7-0.

Mr. Mikorski updated Council on the progress of the Town and Gown Leadership Group meetings, and announced the upcoming meeting for November.

Mr. Mikorski then remarked that ash trays have been acquired for placement in key areas affected by the WVU smoking ban.

REPORT FROM CITY CLERK: No Report.

REPORT FROM CITY ATTORNEY: No Report

REPORT FROM COUNCIL MEMBERS: ***(Roll Reversal)***

Councilor Ganz: Councilor Ganz commended MUB for the national awards and recognition they have earned. She also noted recent media attention that issues such as the storm run-off and post-game antics have been receiving. She stated that she hopes her term on Council is not spent "putting out fires" related to how the City will pay for these situations. She said that the City can't afford to put more money towards expanding BOPARC or paving roads. She hoped an agreement can be worked out with WVU to accommodate these expenses of the City. She congratulated the University for its fiscal prosperity, and hoped the relationship with WVU can be improved as the entities continue to work together through the Town and Gown Association.

Councilor Fike: Councilor Fike commended the success of the International Festival and thanked all who were involved. He reported working with the South Pointe Neighborhood Association and was pleased with their input. He then commended the Young Democrats group for dedicating their Sunday to cleaning up trash along Brockway Avenue. He also discussed the Chinese Student Association's Mid-Autumn Festival, and thanked the group's president for his contributions to the Sister Cities Commission.

Councilor Shamberger:

Councilor Shamberger announced a walking tour of the Morgantown Riverfront organized for the Rivertown Program, after which a discussion will be held. She thanked urban hunters who have donated 935 pounds of venison to local charities, and thanked those who applied for the BOPARC vacancy. She encouraged all to get involved with volunteerism. She stated that she attended the groundbreaking of a new dormitory, and announced an upcoming Woodburn Neighborhood Association clean up event. She spoke of an upcoming BOPARC water festival, and the inquired about the citizen's complaints of the lack of sidewalk and crosswalk at the construction of the new Panera Bread. Mr. Mikorski replied that the City is aware of the situation, and an alternate crossing site is in the works further up the street; however it appears too dangerous to place a temporary crossing at the crowded intersection there. Councilor Shamberger then thanked those who reported post-game misconduct to the police.

Councilor Nugent:

Councilor Nugent thanked WVU officials for explaining the stormwater planning process to Council, expressing hopes of continuing to work together for mutual benefit of the community. He then thanked City staff and administration for participating in his ward tour and hoped that he had been respectful of everyone's time while making valuable observations of needed improvements. He addressed a citizens' comments regarding a stop sign at Highland and Morgan, and asked that the Manager look into the matter. He noted the lighting tour downtown this evening, and Mr. Mikorski stated that the City will look into upgrades for the downtown lighting. Lastly Councilor Nugent announced the First Friday event, Art is Food event and the Arts Walk, encouraging all to enjoy those events.

Councilor Kawecki

Councilor Kawecki echoed concerns that the City should work more closely with WVU, but in a formal and routine manner. He asked the Town and Gown group to make arrangements to meet that goal. He then relayed to students that he wishes them to act with citizenship and responsibility to help deter the acts of destruction so common to game weekends.

Councilor Bane:

Councilor Bane encouraged citizens to write to their national representatives to settle the matters before them in Washington. He also encouraged citizens to be aware and educate themselves about the Affordable Care Act. He then noted a meeting with the County Commission, and asked that the topic of "Municipal Issues" from that meeting be discussed at Committee of the Whole, before presenting those to the County by October 24th.

Mayor Selin added a suggestion to have a special work session dedicated to this discussion. Discussion then erupted about the timeline and best method for reporting back to the County about these items. Council decided to submit three legislative items

each to the Clerk, and then have a work session at 7:00pm on October 22nd in order to prioritize those suggestions.

Councilor Bane continued his report by citing from the Charter about interference with City Administration, warning Council members that they should follow the letter of the Charter where this is concerned, as it is a very serious matter.

Mayor Selin:

Mayor Selin acknowledged a Political Science class in the audience, and then announced that the Communications Manager is seeking applications for a videographer to assist in the broadcast of the Council meetings. She invited the students to attend Boards and Commissions meetings as well. Mayor Selin commented on the Art is Food event and announced a Public Forum for Evansdale Plans in November. She then announced several upcoming community events including, a Tree Pruning Workshop, Fire Prevention Week shows, Arts Walk- Shady Art exhibit, Metropolitan Opera Live, Deckers 10K Run, WV Water Festival, the ongoing Farmer's Market, Year of the Tree Bird Walk, and the Canine Classic 5K Walk/Run.

ADJOURNMENT: There being no further items of business or discussion, the meeting adjourned by unanimous consent at 8:30 p.m.

City Clerk

Mayor

***A FULL TRANSCRIPT OF ALL COUNCIL MEETINGS IS AVAILABLE ON DVD AT THE MORGANTOWN CITY LIBRARY.**

Office of the City Manager

The City of Morgantown

Jeff Mikorski, ICMA-CM
City Manager
389 SPRUCE STREET
MORGANTOWN, WEST VIRGINIA 26505
(304) 284-7405 FAX: (304) 284-7430
www.morgantownwv.gov

City Manager's Report for City Council October 15, 2013

New Business:

1. **Agreement with Tamarack for the sale of products at the Morgantown Municipal Airport.** I am pleased to provide the attached agreement with Tamarack to place West Virginia handmade products for sale into the display cases at the Morgantown Municipal Airport. This is a great way to cross-promote the airport, West Virginia craftspeople, and Tamarack. The Airport will receive a five percent commission on all products sold at the airport.

2. **Renewal of the City's Group Health Plan**
   Attached is a brief memo describing proposed changes in the City's Health Insurance Program that would include a vision benefit, changes in spousal carveout procedures, changes in retirement policies, and added language that was approved in the plan in previous years that was not added to the text of the plan, and changed language to reflect the Affordable Care Art laws. I recommend that the changes be authorized.

Jeff Mikorski ICMA-CM,
Morgantown City Manager

Memorandum of Understanding
August 16, 2013

Parties to the Agreement
TAMARACK: *The Best of West Virginia*
The City of Morgantown on behalf of the Morgantown Municipal Airport

Purpose
This Memorandum of Understanding is entered into as a joint agreement for the promotion of TAMARACK: *The Best of West Virginia* and the City of Morgantown on behalf of the Morgantown Municipal Airport to raise awareness of West Virginia's talented craftspeople, artisans and food producers.

The purpose is to promote West Virginia through handmade West Virginia products and to cross-promote Tamarack and the Morgantown Municipal Airport.

Responsibility for Product
TAMARACK: *The Best of West Virginia* holds harmless the City of Morgantown from any liability for the product in the display cases, except in the case of gross negligence. Tamarack will replenish product as it is needed. Because of limited production on many handmade items, Tamarack cannot guarantee the availability of specific items.

Security
The Morgantown Municipal Airport will conduct daily visual inspections of all four (4) locking cases to ensure that the units are locked and undisturbed.

Sales
The Morgantown Municipal Airport will conduct sales on a daily basis during normal working hours. The Morgantown Municipal Airport will collect West Virginia sales tax as follows: 6% for consumer products, 0% for food products.

Discounts
No discounts will be offered on items sold through the Morgantown Municipal Airport.

Payment
The Morgantown Municipal Airport shall maintain records of all sales and remit payment to Tamarack within ten (10) days after the end of each month. Payment should include gross sales less the 5% commission charged by the Morgantown Municipal Airport in addition to the full West Virginia State sales tax on the gross sales amount. Tamarack will be responsible for reporting and remitting taxes collected to the State of West Virginia. Payments should be made payable Tamarack and remitted to:

Tamarack
Attn: Dwight Trent
One Tamarack Park
Beckley, WV 25801

Signage
Tamarack will create signage for placement above the large cherry display. Tamarack will also develop signage to clearly indicate the price of items in all the display cases. The price will be the price charged by the Morgantown Municipal Airport to the customer and the airport's commission will be a 5% reduction of this price. Prices will be similar to the price charged by Tamarack at their other sales locations. The Morgantown Municipal Airport will develop signage to direct visitors and guests to the FBO for purchase and payment of products.

Marketing Materials
Tamarack will be permitted to display and distribute appropriate marketing materials at the Morgantown Municipal Airport. In turn, Tamarack will promote the availability of product at this location on Facebook and through its e-mail newsletter at least once per quarter.

Lighting
The Morgantown Municipal Airport will be responsible for ensuring that lighting in all four (4) locking display units is operational during normal business hours.

Term of Agreement
Commencing September 1, 2013, this marketing and promotional agreement will remain in effect through August 31, 2014, being renewable with a written agreement by both parties after the initial time commitment.

Termination
Either party may terminate after the initial time commitment of one (1) year with a written notification of 30 calendar days.

9-23-13

Cheryl Hartley – Tamarack General Manager Date

Jeff Mikorski – City Manager Date

City of Morgantown
Group Health Plan

Summary of Plan Document Revisions
Effective January 1, 2014 (unless otherwise indicated below)

- Inserted all previously approved amendments into the Plan Document.
- Removed the ERISA Section and ERISA language throughout the document except where mandated by COBRA. Replaced it with language for municipalities provided by BAC's legal counsel.
- Revised the agent for legal process.
- Added Vision Benefits – 1 eye exam and 1 pair of glasses or contacts per year, City of Morgantown pays 80% of costs up to a maximum annual benefit of $200 for active employees and their beneficiaries.
- Revised the name of the plan, due to the addition of vision benefits, to City of Morgantown Group Health Plan which will allow the City to add or delete ancillary benefits as necessary without further revision to the Plan name.
- Replaced the spousal carveout language with spousal surcharge language. Requirements remain the same, Spouses meeting these requirements may remain on the plan but must pay a surcharge.
- Replaced the Qualified Medical Child Support Order language with the National Medical Support Notice language used by non-ERISA plans.
- Removed the reference to the Best Doctors program that was removed due to lack of use.
- Clarified under the Prescription Drug Benefit that as of January 1, 2011 the City of Morgantown no longer offers the prescription drug benefit to Medicare-eligible retirees.
- Medicare eligible retirees may remain in the City's active Plan but must pay the full premium cost. The City is continuing the group sponsored Medicare Plan and is currently paying 20% of the cost.
- Due to state code provisions, revised coverage for Eligible Retirees to state that Employees hired on or after January 1, 2011 are eligible for retiree coverage under the City of Morgantown retiree plan but must pay the full cost or a higher percentage share of cost than pre January 1, 2011 hires. Should these employees leave the plan at retirement, they may make a 1 time election when they become Medicare eligible to join the City's group sponsored Medicare Plan, but may not rejoin the active Plan. Contact the Plan Administrator for further information.
- Added the future deductible increase for retirees to the document (all previously approved), effective 01/01/16, increasing retiree deductibles to the same level as the active employees.

ACA Regulation Changes:

- Revised Annual Maximum Benefit to Annual Maximum Benefit For Nonessential Health Benefits and revised the $5,000,000 All Benefits limitation to $5,000,000 All Nonessential Health Benefits to comply with ACA regulations for plan years beginning on or after 01/01/14, all annual dollar limits on Essential Health Benefits are prohibited.

- Added an exclusion date of January 1, 2014 after Pre-Existing Conditions since pre-ex can still be applied for adults up to that date but can no longer be applied as of that date to comply with ACA regulations.
- Removed the termination of coverage provision for when an Employee, Retiree or Dependent exhausts the Plan's individual Lifetime Maximum Benefit. ACA regulations no longer allow a lifetime maximum.
- Revised Claims Processing Procedures to comply with the ACA regulations.
- Revised the definition of Essential Health Benefits as defined by ACA regulations.

BOARDS AND COMMISSIONS - TERMS EXPIRED AND CURRENT VACANCIES

BOARD OF ZONING APPEALS:

Thomas Shamberger does not wish to continue to serve on this board. Deadline for applicants is 10-15-13. Council will interview candidates at a Special Meeting in November. Residents appointed by City Council-5members.

MUB BOARD:

Bill Rice term expires on 11/4/2013. He was serving to replace Bill Burton's resignation. There is a letter attached from Tim Ball, General Manager, MUB, asking Council to consider Mr. Rice for the Burton/Rice appointment. 2 appointments from County, 3 from City.

PLANNING COMMISSION:

William Wyant, Third Ward Representative on this commission wishes not to continue to serve. Peter DeMasters, Sixth Ward Representative, will continue to serve. Deadline for applicants is 10-15-13. Nominated by City Manager on recommendation. Confirmed by City Council.

PERSONNEL BOARD:

Ken Fones-Wolf's term expired on August 11, 2013. Council will need to interview applicants at a Special Meeting October 15, 2013; and select a new member to fill that vacancy during Boards and Commissions. Residents and qualified voters serve at large.

TRAFFIC COMMISSION:

5th ward and 7th ward members have resigned. Councilors Shamberger and Ganz are looking for replacements. Residents appointed by Council, must represent specific categories.

URBAN LANDSCAPE COMMISSION:

Judy Kierig resigned this is a Second Ward representative, our Second Ward Councilor (Bill Kawecki) is searching to find a replacement. Residents appointed by Council, must represent specific categories.

WOODBURN SCHOOL REDEVELOPMENT COMMISSION:

7 members shall be appointed by Council. After press release is published for 30 days interviews will be done at a Special Meeting to select commission.

***POLICE & FIRE CIVIL SERVICE COMMISSIONS:** NEW PRESIDENTS APPOINTED IN JANUARY.

Information for Boards and Commissions vacancies are placed in the Dominion Post, are advertised on the City's Government Station Channel 15, and are posted at the Library and also information is on the City's Web Page.

Council decided on 3-21-06 by unanimous consent that if there is only one candidate for Boards & Commissions, the City Clerk will check with Council before scheduling a Special Meeting.

BZA and Planning Commission term expirations are advertised in October and interviews must be completed by December per State Law.

Boards and Commission interview structure will be reviewed at a Committee of the Whole. **10/9/13**

MEMORANDUM

TO: City Council
Jeff Mikorski, City Manager

FROM: Timothy L. Ball, General Manager, MUB

DATE: October 9, 2013

SUBJECT: **MUB BOARD**
Re-APPOINTMENT OF WILLIAM RICE

At its meeting on October 8, 2013, the MUB Board members directed that the following recommendation should be forwarded to City Council, as the Council members consider their selection of an appointee to fill the soon to expire term for the MUB Board position formerly held by William Burton.

Recall that the City Council recently appointed Mr. William Rice to fill that unexpired term. The term of the Burton / Rice appointment will expire November 4, 2013.

The MUB Board respectfully recommends, in light of his appointment only 3 months ago to fill the unexpired term of William Burton, that Mr. William Rice be re-appointed to a full 5 year term on the Board.

Recall that the Council recently enacted a revision to City Code section 169.01, to allow non-residents of the City to be eligible, so long as they are residential customers of MUB, and they reside with the County.

The revision to 169.01 was proposed in recognition of the fact that approximately half of MUB's customers reside outside of the City. The proportion of non-resident customers is increasing, and for these reasons, the MUB Board feels that it is appropriate and important to allow those non-resident customers to be more directly represented through Board membership. Mr. Rice is the first non-resident to have been appointed under the new eligibility rules.

CITY OF MORGANTOWN

AN ORDINANCE AMENDING SECTION 925.03 OF THE CITY OF MORGANTOWN'S STREETS, UTILITIES AND PUBLIC SERVICES CODE BY SETTING FORTH THE RATES, FEES AND CHARGES FOR SERVICE TO CUSTOMERS OF THE SEWERAGE SYSTEM OF THE CITY OF MORGANTOWN.

THE COUNCIL OF THE CITY OF MORGANTOWN HEREBY ORDAINS: The following rules, rates and charges are hereby fixed, determined and established for municipal sewerage services provided to all general domestic, commercial, industrial and resale users and customers of the City of Morgantown's Municipal Sewage Treatment Plant and Collection System, commencing upon the effective date as hereinafter provided, and in accordance with the following Rates and Schedules:

925.03 SCHEDULE OF RATES

SCHEDULE NO. 1

(a) Applicable to entire territory served, except that served by Cheat Lake Wastewater Treatment Plant, the former Canyon Public Service District, and the former Scott's Run Public Service District. Effective for bills rendered on or after January 1, 2012 except as otherwise noted.

(1) Availability of service. Available for sanitary sewer service.

(2) Rate. Based upon the metered amount of water supplied.

Gallons Used

First 60,000 per month, or 120,000 bi-monthly	$4.66 per 1,000 gallons
All Over 60,000 per month, or 120,000 bi-monthly	$4.00 per 1,000 gallons

(3) Minimum Charge.

Per month	$ 4.66
Bi-monthly	$ 9.32

(4) Tap fee. The following charges are to be made whenever the utility installs a new tap to serve an applicant. A tap fee of one hundred dollars ($100.00) will be charged to customers applying for service before construction is completed adjacent to the customer's premises in connection with a certificate proceeding before the Commission. This pre- construction tap fee will be invalid after the completion of construction adjacent to an applicant's premises that is associated with a certificate proceeding. A tap fee of seven hundred dollars ($700.00) will be charged to all customers who apply for service outside of a certificate proceeding before the Commission for each new tap system.

(5) Delayed payment penalty. The above tariff is net. On all current usage billings not paid in full when due, ten percent (10%) will be added to the net current amount unpaid. This delayed payment penalty is not interest and is only to be collected once for each month where it is appropriate.

(6) Reconnection charge. A fee of fifteen dollars ($15.00) during Utility Board regular working hours and twenty-five dollars ($25.00) after hours shall be charged whenever the service is disconnected for violation of rules, nonpayment of bills, or fraudulent use of water. No such charge shall be assessed if the customer has paid a water reconnection charge for the same reconnection.

(7) Leak adjustment. $0.385 per M gallons is to be used when the bill reflects unusual consumption which can be attributed to eligible water leakage on the customers of the meter. This rate shall beside applied to all such unusual consumption above the customer's historical average usage.

(8) Sunshine Estates Debt Service Surcharge. Applicable only to customers in the Sunshine Estates area: $32.00 per month per customer, or $64.00 bi-monthly per customer. This surcharge will be evaluated annually and in the event that a change in the number of customers results in a five percent (5%) change in the rate, the rate will be adjusted.

(9) Sunshine Estates DCPSD Transportation Surcharge. Applicable only to customers in the Sunshine Estates area: $0.25 per 1,000 gallons.

(10) The surcharges described immediately above shall become effective forty-five (45) days after enactment, or as soon thereafter as the same may be approved by the Public Service Commission of West Virginia; and upon completion of the Sunshine Estates Sewer Project.

SCHEDULE NO. 2

(b) Applicable to territory served by Cheat Lake Wastewater Treatment Plant. Effective for bills rendered on or after January 1, 2012.

(1) Availability of service. Available for sanitary sewer service.

(2) Rate. Based upon the metered amount of water supplied.

Gallons Used			
First	2,000 per month	or 4,000 bi-monthly	$8.75 per 1,000 gallons
Next	8,000 per month	or 16,000 bi-monthly	$8.00 per 1,000 gallons
Next	20,000 per month	or 40,000 bi-monthly	$7.50 per 1,000 gallons
Next	30,000 per month	or 60,000 bimonthly	$7.00 per 1,000 gallons
Next	940,000 per month	or 1,880,000 bi-monthly	$6.00 per 1,000 gallons
All Over	1,000,000 per month	or 2,000,000 bi-monthly	$5.50 per 1,000 gallons

(3) Minimum Charge.

A. Per month	$ 17.50
B. Bimonthly	$ 35.00

(4) Tap fee. A fee of seven hundred dollars ($700.00) will be charged for new customers connecting to the sewerage system.

(5) Delayed Payment Penalty. The above tariff is net. On all current usage billings not paid in full when due, ten percent (10%) will be added to the net current amount unpaid. This delayed payment penalty is not interest and is only to be collected once for each month where it is appropriate.

(6) Reconnection Charge. A fee of fifteen dollars ($15.00) during Utility Board regular working hours and twenty-five dollars ($25.00) after hours shall be charges whenever the service is disconnected for violation of rules, nonpayment of bills, or fraudulent use of water. No such charge shall be assessed if the customer has paid a water reconnection charge for the same reconnection.

(7) Leak Adjustment. $0.385 per M gallons is to be used when the bill reflects unusual consumption which can be attributed to eligible water leakage on the customer's side of the meter. This rate shall be applied to all such unusual consumption above the customer's historical average usage.

SCHEDULE NO. 3

(c) Applicable to territory served by Star City Wastewater Treatment Plant, and delivered by other systems. Effective for bills rendered on or after January 1, 2012.

(1) Availability of service. Available for sanitary sewer service to other systems.

(2) Rates. All wastewater from other systems will be treated at the approved rate of $1.50 per 1,000 gallons.

SCHEDULE NO. 4

(d) Applicable to the former Canyon Public Service District service area. Effective ~~forty-five (45) days after enactment, or as soon thereafter as the same may be approved by the Public Service Commission of West Virginia; and upon acquisition of the Canyon Public Service District.~~ for bills rendered on or after August 22, 2013.

(1) Availability of service. Available for sanitary sewer service.

(2) Rates. (Customers with metered water supply)

Service Charge	$8.50 per month, or $17.00 bi-monthly
Usage Charge	$8.67 per 1,000 gallons

(3) Minimum Charge. No minimum bill will be rendered for less than the following based on meter size:

Meter Size	Minimum Charge
5/8"	$25.46 per month, or $50.92 bi-monthly
1 1/2"	$125.78 per month, or $251.56 bi-monthly
2"	$201.02 per month, or $402.04 bi-monthly

(4) Flat Rate Charge. Customers with non-metered water supply $25.84 per month.

(5) Tap fee. The following charges are to be made whenever the utility installs a new tap to serve an applicant. A tap fee of one hundred dollars ($100.00) will be charged to-customers applying for service before construction is completed adjacent to the customer's premises in connection with a certificate proceeding before the Commission. This pre-construction tap fee will be invalid after the completion of construction adjacent to an applicant's premises that is associated with a certificate proceeding. A tap fee of seven hundred dollars ($700.00) will be charged to all customers who apply for service outside of a certificate proceeding before the Commission for each new tap system.

(6) Delayed payment penalty. The above tariff is net. On all current usage billings not paid in full when due, ten percent (10%) will be added to the net current amount unpaid. This delayed payment penalty is not interest and is only to be collected once for each month where it is appropriate.

(7) Disconnection charge. Whenever water service has been disconnected for non-payment of sewer bills in conjunction with a water service termination agreement with the Cheat View Public Service District, a disconnection fee of $15.00 shall be charged or in the event the delinquent sewer bill is collected by Cheat View Public Service District, an administrative fee of
$15.00 shall be charged.

Whenever water service, which has been previously disconnected or otherwise withheld for non-payment of a sewer bill in conjunction with a water service termination agreement with Cheat View Public Service District, is reconnected, a reconnection fee of $15.00 shall be charged.

(8) Leak adjustment. $2.89 per 1,000 gallons is to be used when the bill reflects unusual consumption which can be attributed to eligible water leakage on the customer's side of the meter. This rate shall be applied to all such unusual consumption above the customer's historical average usage.

SCHEDULE NO. 5

(e) Applicable to the former Scott's Run Public Service District service area. Effective forty-five (45) days after enactment, or as soon thereafter as the same may be approved by the Public Service Commission of West Virginia; and upon acquisition of the

Scott's Run Public Service District.

(1) Availability of service. Available for sanitary sewer service.

(2) Rates. (Customers with metered water supply) Service Charge $8.50 per month
Usage Charge $8.53 per 1,000 gallons

(3) Flat Rate Charge. (Customer with non-metered water supply) Equivalent to 3,832 gallons water usage, $41.47.

(4) Delayed payment penalty. The above schedule is net. On all accounts not paid in full when due, ten percent will be added to the net current amount unpaid. This delayed payment penalty is not interest and is to be collected only once for each bill where it is appropriate.

(5) Tap fee. The following charges are to be made whenever the utility installs a new tap to serve an applicant. A tap fee of one hundred dollars ($100.00) will be charged to customers applying for service before construction is completed adjacent to the customer's premises in connection with a certificate proceeding before the Commission. This pre-construction tap fee will be invalid after the completion of construction adjacent to an applicant's premises that is associated with a certificate proceeding. A tap fee of seven hundred dollars ($700.00) will be charged to all customers who apply for service outside of a certificate proceeding before the Commission for each new tap system.

(6) Disconnect/Reconnect/Administrative Fees. Whenever water service has been disconnected for non-payment of sewer bills in conjunction with a water service termination agreement with Pleasant Valley Public Service District, a disconnection fee of $20.00 shall be charged or in the event the delinquent sewer bill is collected by Pleasant Valley Public Service District, an administrative fee of $20.00 shall be charged.

Whenever water service, which has been previously disconnected or otherwise withheld for non-payment of a sewer bill in conjunction with a water service termination agreement with Pleasant Valley Public Service District, is reconnected, a reconnection fee of $20.00 shall be charged.

(7) Returned Check Charge. A service charge equal to the actual bank fee assessed to the sewer utility up to a maximum of $25.00 will be imposed upon any customer whose check for payment of charges is returned by the bank due to insufficient funds.

(8) Leak adjustment. $0.61 per 1,000 gallons of water is to be used when a bill reflects unusual water consumption which can be attributed to eligible leakage on customer's side of meter. This rate shall be applied to all consumption above the customer's historical average usage.

This Ordinance shall become effective forty-five (45) days after enactment or as otherwise provided herein, or as soon thereafter as the same may be approved by the Public Service Commission of West Virginia.

First Reading: October 1, 2013

_____
MAYOR

Second Reading
and Public Hearing: October 15, 2013

_____
CITY CLERK

Filed: _____

Recorded: _____

BOND ORDINANCE

THE CITY OF MORGANTOWN

ORDINANCE AUTHORIZING THE ACQUISITION AND CONSTRUCTION OF EXTENSIONS, ADDITIONS, BETTERMENTS AND IMPROVEMENTS TO THE WASTEWATER PORTION OF THE EXISTING PUBLIC COMBINED WATERWORKS, SEWERAGE AND STORMWATER SYSTEM OF THE CITY OF MORGANTOWN AND THE FINANCING OF THE COST, NOT OTHERWISE PROVIDED, THEREOF THROUGH THE ISSUANCE BY THE CITY OF NOT MORE THAN $1,250,000 IN AGGREGATE PRINCIPAL AMOUNT OF COMBINED UTILITY SYSTEM REVENUE BONDS, SERIES 2014 A (WEST VIRGINIA SRF PROGRAM); PROVIDING FOR THE RIGHTS AND REMEDIES OF AND SECURITY FOR THE REGISTERED OWNERS OF SUCH BONDS; AUTHORIZING EXECUTION AND DELIVERY OF ALL DOCUMENTS RELATING TO THE ISSUANCE OF SUCH BONDS; APPROVING, RATIFYING AND CONFIRMING A BOND PURCHASE AGREEMENT RELATING TO SUCH BONDS; AUTHORIZING THE SALE AND PROVIDING FOR THE TERMS AND PROVISIONS OF SUCH BONDS AND ADOPTING OTHER PROVISIONS RELATING THERETO.

BE IT ORDAINED AND ENACTED BY THE COUNCIL OF THE CITY OF MORGANTOWN:

ARTICLE I

STATUTORY AUTHORITY, FINDINGS AND DEFINITIONS

Section 1.01. Authority for this Ordinance. This Ordinance (together with any ordinance, order or resolution supplemental hereto or amendatory hereof, the "Bond Legislation") is enacted pursuant to the provisions of Chapter 8, Article 20 and Chapter 22C, Article 2 of the West Virginia Code of 1931, as amended (collectively, the "Act"), and other applicable provisions of law.

Section 1.02. Findings. It is hereby found, determined and declared that:

A. The City of Morgantown (the "Issuer") is a municipal corporation and political subdivision of the State of West Virginia in Monongalia County of said State.

B. The Issuer presently owns and operates, through the Morgantown Utility Board (the "Board"), a public combined waterworks, sewerage, and stormwater system. It is deemed necessary and desirable for the health and welfare of the inhabitants of the Issuer, that there be acquired and constructed certain extensions, additions, betterments and improvements to the wastewater portion of the existing public combined waterworks, sewerage, and stormwater system of the Issuer, consisting of installation of gravity sewer main, manholes, lift station and forcemain and all necessary appurtenances to provide sewer service to Sunshine Estates (collectively, the "Project") (the existing public combined waterworks, sewerage, and stormwater system of the Issuer, the Project and any further extensions, additions, betterments and improvements thereto are herein called the "System"), in accordance with the plans and specifications prepared by the Consulting Engineers, which plans and specifications have heretofore been filed with the Issuer.

C. The Issuer intends to permanently finance a portion of such costs of acquisition and construction of the Project through the issuance of its revenue bonds to the West Virginia Water Development Authority (the "Authority"), in connection with the West Virginia Water Pollution Control Revolving Fund Program (the "SRF Program"), which the Authority administers pursuant to the Act.

D. It is deemed necessary for the Issuer to issue its Combined Utility System Revenue Bonds, Series 2014 A (West Virginia SRF Program), in the aggregate principal amount of not more than $1,250,000 (the "Series 2014 A Bonds"), to permanently finance a portion of the costs of acquisition and construction of the Project. Said costs shall be deemed to include the cost of all property rights, easements and franchises deemed necessary or convenient therefor and eligible under the SRF Program; interest, if any, upon the Series 2014 A Bonds for a period not exceeding 6 months after completion of construction of the Project; amounts which may be deposited in the Series 2014 A Bonds Reserve Account (as hereinafter defined) or amounts which may be used to purchase a surety bond to fund the Series 2014 A Bonds Reserve Account; engineering and legal expenses; expenses for estimates of costs and revenues, expenses for plans, specifications and surveys; other expenses necessary or incident to determining the feasibility or practicability of the enterprise, administrative expense, commitment fees, fees and expenses of the Authority, including the SRF Administrative Fee (as hereinafter defined); discount, initial fees for the services of registrars, paying agents, depositories or trustees or other costs in connection with the sale of the Series 2014 A Bonds and such other expenses as may be necessary or incidental to the financing herein authorized, the acquisition or construction of the Project and the placing of same in operation, and the performance of the things herein required or permitted, in connection with any thereof, provided, that reimbursement to the Issuer or the Board for any amounts expended by them for allowable costs prior to the issuance of the Series 2014 A Bonds or the repayment of indebtedness incurred by the Issuer for such purposes shall be deemed Costs of the Project, as hereinafter defined.

E. The period of usefulness of the System after completion of the Project is not less than 40 years.

F. It is in the best interests of the Issuer that its Series 2014 A Bonds be sold to the Authority pursuant to the terms and provisions of a Bond Purchase Agreement by and among the Issuer, the Authority and the West Virginia Department of Environmental Protection (the "DEP"), in form satisfactory to the respective parties (the "Bond Purchase Agreement"), approved hereby if not previously approved by resolution of the Issuer.

G. There are outstanding obligations of the Issuer which will rank on a parity with the Series 2014 A Bonds as to liens, pledge, source of and security for payment, being the Issuer's:

(1) Combined Utility System Revenue Bonds, Series 1995 (West Virginia SRF Program), dated April 27, 1995, issued in the original aggregate principal amount of $1,601,477 (the "Series 1995 Bonds");

(2) Combined Utility System Revenue Bonds, Series 2000 A (West Virginia SRF Program), dated February 29, 2000, issued in the original aggregate principal amount of $7,842,000 (the "Series 2000 A Bonds");

(3) Combined Utility System Revenue Bonds, Series 2000 B (West Virginia Infrastructure Fund), dated February 29, 2000, issued in the original aggregate principal amount of $2,488,000 (the "Series 2000 B Bonds");

(4) Combined Utility System Revenue Bonds, Series 2001 A (West Virginia Infrastructure Fund), dated February 8, 2001, issued in the original aggregate principal amount of $3,812,470 (the "Series 2001 A Bonds");

(5) Combined Utility System Revenue Bonds, Series 2006 A (West Virginia SRF Program), dated June 30, 2006, issued in the original aggregate principal amount of $6,410,191 (the "Series 2006 A Bonds");

(6) Combined Utility System Revenue Bonds, Series 2007 A (West Virginia SRF Program), dated August 14, 2007, issued in the original aggregate principal amount of $8,500,000 (the "Series 2007 A Bonds");

(7) Combined Utility System Revenue Bonds, Series 2010 A (Direct Payment Build America Bonds), dated January 28, 2010, issued in the original aggregate principal amount of $37,950,000 (the "Series 2010 A Bonds");

(8) Combined Utility System Revenue Bonds, Series 2010 B (West Virginia SRF Program/ARRA), dated January 28, 2010, issued in the original aggregate principal amount of $81,600 (the "Series 2010 B Bonds");

(9) Combined Utility System Revenue Bonds, Series 2010 C (West Virginia SRF Program), dated January 28, 2010, issued in the original aggregate principal amount of $15,380,227 (the "Series 2010 C Bonds");

(10) Combined Utility System Revenue Bonds, Series 2010 D (West Virginia DWTRF Program), dated January 28, 2010, issued in the original aggregate principal amount of $9,317,286 (the "Series 2010 D Bonds");

(11) Combined Utility System Revenue Bonds, Series 2010 E (West Virginia DWTRF Program/ARRA), dated January 28, 2010, issued in the original aggregate principal amount of $100,000 (the "Series 2010 E Bonds");

(12) Combined Utility System Revenue Bonds, Series 2010 F (Bank Qualified), dated January 28, 2010, issued in the original aggregate amount of $7,250,000 (the "Series 2010 F Bonds"),

(13) Combined Utility System Revenue Bonds, Series 2012 A (West Virginia DWTRF Program), dated August 24, 2012, issued in the original aggregate principal amount of $570,000 (the "Series 2012 A Bonds");

(14) Combined Utility System Revenue Bonds, Series 2012 B (West Virginia DWTRF Program), dated August 24, 2012, issued in the original aggregate principal amount of $444,835 (the "Series 2012 B Bonds");

(15) Combined Utility System Revenue Bonds, Series 2012 C (Bank Qualified), dated October 5, 2012, issued in the original aggregate principal amount of $2,330,000 (the "Series 2012 C Bonds"); and

(16) Combined Utility System Revenue Bonds, Series 2013 A (West Virginia Infrastructure Fund), dated August 22, 2013, issued in the original aggregate principal amount of $4,605,260 (the "Series 2013 A Bonds"), (collectively, the "Prior Bonds").

H. Prior to the issuance of the Series 2014 A Bonds, the Issuer will obtain (i) the certificate of an Independent Certified Public Accountant stating that the coverage and parity tests of the Prior Bonds are met, and (ii) the written consent of the Holders of the Series 1995 Bonds, Series 2000 A Bonds, Series 2000 B Bonds, Series 2001 A Bonds, Series 2006 A Bonds, Series 2007 A Bonds, Series 2010 B Bonds, Series 2010 C Bonds, Series 2010 D Bonds, Series 2010 E Bonds, Series 2012 A Bonds, Series 2012 B Bonds and Series 2013 A Bonds to the issuance of the Series 2014 A Bonds on a parity with the Prior Bonds. The Series 2010 A Bonds, Series 2010 F Bonds and Series 2012 C Bonds do not require consent. Other than the Prior Bonds, there are no other outstanding bonds or obligations of the Issuer which are secured by revenues or assets of the System. The Issuer is in compliance with all the covenants of the Prior Bonds and the Prior Ordinances.

I. The estimated revenues to be derived in each year after completion of the Project from the operation of the System will be sufficient to pay all costs of operation and maintenance of the System and the principal of and interest, if any, on the Series 2014 A Bonds and the Prior Bonds and to make payments into all funds and accounts and other payments provided for herein.

J. The Issuer has complied with all requirements of West Virginia law and the Bond Purchase Agreement relating to authorization of the acquisition, construction and operation of the Project and the System and issuance of the Series 2014 A Bonds, or will have so complied prior to issuance of any thereof, including, among other things, the approval of the Project and the financing thereof by the West Virginia Infrastructure and Jobs Development Council and the obtaining of a Certificate of Public Convenience and Necessity from the Public Service Commission of West Virginia.

K. The Project has been reviewed and determined to be technically and financially feasible by the Council as required under Chapter 31, Article 15A of the West Virginia Code of 1931, as amended.

Section 1.03. Bond Legislation Constitutes Contract. In consideration of the acceptance of the Series 2014 A Bonds by the Registered Owners of the same from time to time, this Bond Legislation shall be deemed to be and shall constitute a contract between the Issuer and such Bondholders, and the covenants and agreements herein set forth to be performed by the

Issuer shall be for the equal benefit, protection and security of the Bondholders of any and all of such Series 2014 A Bonds, all of which shall be of equal rank and without preference, priority or distinction between any one Bond and any other Bonds and by reason of priority of issuance or otherwise, except as expressly provided therein and herein.

Section 1.04. Definitions. The following terms shall have the following meanings herein unless the context expressly requires otherwise:

"Act" means, collectively, Chapter 8, Article 20 and Chapter 22C, Article 2 of the West Virginia Code of 1931, as amended and in effect on the date of enactment hereof.

"Authority" means the West Virginia Water Development Authority, which is expected to be the original purchaser and Registered Owner of the Series 2014 A Bonds, or any other agency, board or department of the State that succeeds to the functions of the Authority, acting in its administrative capacity and upon authorization from the DEP under the Act.

"Authorized Officer" means the Mayor or the City Manager of the Issuer, and, in the instance of the Board, the Chairman, the General Manager or the Assistant General Manager, or any other officer of the Issuer or Board specifically designated by resolution of the Governing Body or the Board, as appropriate.

"Board" means the Morgantown Utility Board of the Issuer.

"Bondholder," "Holder of the Bonds," "Holder," "Registered Owner" or any similar term whenever used herein with respect to an outstanding Bond or Bonds, means the person in whose name such Bond is registered.

"Bond Legislation," "Ordinance," "Bond Ordinance" or "Local Act" means this Bond Ordinance and all ordinances, orders and resolutions supplemental hereto or amendatory hereof.

"Bond Purchase Agreement" means the Bond Purchase Agreement heretofore entered, or to be entered, into by and among the Issuer, the Authority and the DEP, providing for the purchase of the Series 2014 A Bonds from the Issuer by the Authority, the form of which shall be approved, and the execution and delivery by the Issuer authorized and directed or ratified, by the Supplemental Resolution.

"Bond Registrar" means the bank or other entity to be designated as such in the Supplemental Resolution and its successors and assigns.

"Bonds" means, collectively, the Series 2014 A Bonds, the Prior Bonds and, where appropriate, any bonds on a parity therewith subsequently authorized to be issued hereunder or by another ordinance of the Issuer.

"Bond Year" means the 12-month period beginning on the anniversary of the Closing Date in each year and ending on the day prior to the anniversary date of the Closing Date in the following year, except that the first Bond Year shall begin on the Closing Date.

"City Clerk" means the City Clerk of the Issuer.

"City Manager" means the City Manager of the Issuer.

"Closing Date" means the date upon which there is an exchange of the Series 2014 A Bonds for all or a portion of the proceeds of the Series 2014 A Bonds from the Authority and the DEP.

"Code" means the Internal Revenue Code of 1986, as amended, and the Regulations.

"Commission" means the West Virginia Municipal Bond Commission or any other agency of the State of West Virginia that succeeds to the functions of the Commission.

"Completion Date" means the completion date of the Project, as defined in the SRF Regulations.

"Consulting Engineers" means any qualified engineer or firm of engineers, licensed by the State, that shall at any time hereafter be procured by the Issuer as Consulting Engineers for the System, or portion thereof, in accordance with Chapter 5G, Article 1 of the West Virginia Code of 1931, as amended; provided however, that the Consulting Engineers shall not be a regular, full-time employee of the State or any of its agencies, commissions, or political subdivisions. "Consulting Engineer" shall also include a licensed professional engineer employed by the Board, who is responsible for design and/or supervision of improvements, additions or modifications to the System.

"Costs" or "Costs of the Project" means those costs described in Section 1.02D hereof to be a part of the cost of acquisition and construction of the Project.

"Council" means the West Virginia Infrastructure and Jobs Development Council.

"DEP" means the West Virginia Department of Environmental Protection, or any other agency, board or department of the state that succeeds to the function of the DEP.

"Depository Bank" means the bank designated as such in the Supplemental Resolution, and its successors and assigns, which shall be a member of FDIC.

"Depreciation Fund" means the Depreciation Fund created by the Prior Ordinances and continued hereby.

"FDIC" means the Federal Deposit Insurance Corporation and any successor to the functions of the FDIC.

"Fiscal Year" means each 12-month period beginning on July 1 and ending on the succeeding June 30.

"Governing Body" means the council of the Issuer, as it may now or hereafter be constituted.

"Government Obligations" means direct obligations of, or obligations the timely payment of the principal of and interest on which is guaranteed by, the United States of America.

"Grants" means any grants committed to the Project.

"Gross Revenues" means the aggregate gross operating and non-operating revenues of the System, as hereinafter defined, determined in accordance with generally accepted accounting principles, after deduction of prompt payment discounts, if any, and reasonable provision for uncollectible accounts; provided, that "Gross Revenues" include any gains from the sale or other disposition of capital assets, but does not include any increase in the value of capital assets (including Qualified Investments, as hereinafter defined) or any Tap Fees (as hereinafter defined).

"Herein," "hereto" and similar words shall refer to this entire Bond Legislation.

"Independent Certified Public Accountant" means any certified public accountant or firm of certified public accountants that shall at any time hereafter be retained by the Issuer to prepare an independent annual or special audit of the accounts of the System or for any other purpose except keeping the accounts of the System in the normal operation of its business and affairs.

"Issuer" means The City of Morgantown, a municipal corporation and political subdivision of the State of West Virginia, in Monongalia County, West Virginia, and, unless the context clearly indicates otherwise, includes the Governing Body of the Issuer.

"Mayor" means the Mayor of the Issuer.

"Net Proceeds" means the face amount of the Series 2014 A Bonds, plus accrued interest and premium, if any, less original issue discount, if any, and less proceeds, if any, deposited in the Reserve Accounts.

"Net Revenues" means the balance of the Gross Revenues, remaining after deduction of Operating Expenses, as hereinafter defined.

"Operating Expenses" shall mean the reasonable, proper and necessary costs of repair, maintenance and operation of the System and includes, without limiting the generality of the foregoing, administrative, engineering, legal, auditing and insurance expenses, other than those capitalized as part of the Costs, fees and expenses of the Authority, fiscal agents, the Depository Bank, the Registrar and Paying Agent (all as hereinafter defined), other than those capitalized as part of the Costs, the SRF Administrative Fee, payments to pension or retirement funds, taxes and such other reasonable operating costs and expenses as should normally and regularly be included under generally accepted accounting principles; provided, that "Operating Expenses" does not include payments on account of the principal of or redemption premium, if any, or interest on the Bonds, charges for depreciation, losses from the sale or other disposition of, or from any decrease in the value of, capital assets, amortization of debt discount or such miscellaneous deductions as are applicable to prior accounting periods.

"Operation and Maintenance Fund" means the Operation and Maintenance Fund established by the Prior Ordinances and continued hereby.

"Outstanding" when used with reference to Bonds or Prior Bonds and as of any particular date, describes all Bonds or Prior Bonds theretofore and thereupon being authenticated and delivered, except (i) any Bond or Prior Bond cancelled by the Bond Registrar or Registrar for Prior Bonds, at or prior to said date; (ii) any Bond or Prior Bonds, for the payment of which moneys, equal to its principal amount and redemption premium, if applicable, with interest to the date of maturity or redemption shall be in trust hereunder, and set aside for such payment

(whether upon or prior to maturity); (iii) any Bond deemed to have been paid as provided in Article X hereof; (iv) any Prior Bond deemed to have been paid; and (v) for purposes of consents or other action by a specified percentage of Bondholders, or holders of Prior Bonds, any Bonds or Prior Bonds registered to the Issuer.

"Parity Bonds" means additional Bonds issued under the provisions and within the limitations prescribed by Section 7.07 hereof.

"Paying Agent" means the Commission or other entity designated as such for the Series 2014 A Bonds in the Supplemental Resolution.

"Prior Bonds" means, collectively, the Series 1995 Bonds, Series 2000 A Bonds, Series 2000 B Bonds, Series 2001 A Bonds, Series 2006 A Bonds, Series 2007 A Bonds, Series 2010 A Bonds, Series 2010 B Bonds, Series 2010 C Bonds, Series 2010 D Bonds, Series 2010 E Bonds, Series 2010 F Bonds, Series 2012 A Bonds, Series 2012 B Bonds, Series 2012 C Bonds, and Series 2013 A Bonds.

"Prior Ordinances" means, collectively, the ordinances authorizing the Prior Bonds.

"Project" means the Project as described in Section 1.02B hereof.

"Qualified Investments" means and includes any of the following:

(a) Government Obligations;

(b) Government Obligations which have been stripped of their unmatured interest coupons, interest coupons stripped from Government Obligations, and receipts or certificates evidencing payments from Government Obligations or interest coupons stripped from Government Obligations;

(c) Bonds, debentures, notes or other evidences of indebtedness issued by any of the following agencies: Banks for Cooperatives; Federal Intermediate Credit Banks; Federal Home Loan Bank System; Export-Import Bank of the United States; Federal Land Banks; Government National Mortgage Association; Tennessee Valley Authority; or Washington Metropolitan Area Transit Authority;

(d) Any bond, debenture, note, participation certificate or other similar obligations issued by the Federal National Mortgage Association to the extent such obligation is guaranteed by the Government National Mortgage Association or issued by any other federal agency and backed by the full faith and credit of the United States of America;

(e) Time accounts (including accounts evidenced by time certificates of deposit, time deposits or other similar banking arrangements) which, to the extent not insured by the FDIC, shall be secured by a pledge of Government Obligations, provided, that said Government Obligations pledged either must mature as nearly as practicable coincident with the maturity of said time accounts or must be replaced or increased so that the market value thereof is always at least equal to the principal amount of said time accounts;

(f) Money market funds or similar funds whose only assets are investments of the type described in paragraphs (a) through (e) above;

(g) Repurchase agreements, fully secured by investments of the types described in paragraphs (a) through (e) above, with banks or national banking associations which are members of FDIC or with government bond dealers recognized as primary dealers by the Federal Reserve Bank of New York, provided, that said investments securing said repurchase agreements either must mature as nearly as practicable coincident with the maturity of said repurchase agreements or must be replaced or increased so that the market value thereof is always at least equal to the principal amount of said repurchase agreements, and provided further that the holder of such repurchase agreement shall have a prior perfected security interest in the collateral therefor; must have (or its agent must have) possession of such collateral; and such collateral must be free of all claims by third parties;

(h) The West Virginia "consolidated fund" managed by the West Virginia Board of Treasury Investments pursuant to Chapter 12, Article 6C of the West Virginia Code of 1931, as amended; and

(i) Obligations of States or political subdivisions or agencies thereof, the interest on which is exempt from federal income taxation, and which are rated at least "A" by Moody's Investors Service, Inc. or Standard & Poor's Corporation.

"Registered Owner," "Bondholder," "Holder" or any similar term means whenever used herein with respect to an outstanding Bond or Bonds, the person in whose name such Bond is registered.

"Registrar" means the Bond Registrar.

"Regulations" means temporary and permanent regulations promulgated under the Code, or any predecessor thereto.

"Reserve Accounts" means, collectively, the respective Reserve Accounts established for the Series 2014 A Bonds and the Prior Bonds.

"Reserve Requirement" means, collectively, the respective amounts required to be on deposit in any Reserve Account for the Prior Bonds and the Series 2014 A Bonds.

"Revenue Fund" means the Revenue Fund created by the Prior Ordinances and continued hereby.

"Series 1995 Bonds" means the Combined Utility System Revenue Bonds, Series 1995 (West Virginia SRF Program), of the Issuer, dated April 27, 1995, issued in the original aggregate principal amount of $1,601,477.

"Series 2000 A Bonds" means the Combined Utility System Revenue Bonds, Series 2000 A (West Virginia SRF Program), of the Issuer, dated February 29, 2000, issued in the original aggregate principal amount of $7,842,000.

"Series 2000 B Bonds" means the Combined Utility System Revenue Bonds, Series 2000 B (West Virginia Infrastructure Fund), of the Issuer, dated February 29, 2000, issued in the original aggregate principal amount of $2,488,000.

"Series 2001 A Bonds" means the Combined Utility System Revenue Bonds, Series 2001 A (West Virginia Infrastructure Fund), of the Issuer, dated February 8, 2001, issued in the original aggregate principal amount of $3,812,470.

"Series 2006 A Bonds" means the Combined Utility System Revenue Bonds, Series 2006 A (West Virginia SRF Program), of the Issuer, dated June 30, 2006, issued in the original aggregate principal amount of $6,410,191.

"Series 2007 A Bonds" means the Combined Utility System Revenue Bonds, Series 2007 A (West Virginia SRF Program), of the Issuer, dated August 14, 2007, issued in the original aggregate principal amount of $8,500,000.

"Series 2010 A Bonds" means the Combined Utility System Revenue Bonds, Series 2010 A (Direct Payment Build America Bonds), of the Issuer, dated January 28, 2010, issued in the original aggregate principal amount of $37,950,000.

"Series 2010 B Bonds" means the Combined Utility System Revenue Bonds, Series 2010 B (West Virginia SRF Program/ARRA), of the Issuer, dated January 28, 2010, issued in the original aggregate principal amount of $81,600.

"Series 2010 C Bonds" means the Combined Utility System Revenue Bonds, Series 2010 C (West Virginia SRF Program), of the Issuer, dated January 28, 2010, issued in the original aggregate principal amount of $15,380,227.

"Series 2010 D Bonds" means the Combined Utility System Revenue Bonds, Series 2010 D (West Virginia DWTRF Program), of the Issuer, dated January 28, 2010, issued in the original aggregate principal amount of $9,317,286.

"Series 2010 E Bonds" means the Combined Utility System Revenue Bonds, Series 2010 E (West Virginia DWTRF Program/ARRA), of the Issuer, dated January 28, 2010, issued in the original aggregate principal amount of $100,000.

"Series 2010 F Bonds" means the Combined Utility System Revenue Bonds, Series 2010 F (Bank Qualified), of the Issuer, dated January 28, 2010, issued in the original aggregate principal amount of $7,250,000.

"Series 2012 A Bonds" means the Combined Utility System Revenue Bonds, Series 2012 A (West Virginia DWTRF Program), dated August 24, 2012, issued in the original aggregate principal amount of $570,000.

"Series 2012 B Bonds" means the Combined Utility System Revenue Bonds, Series 2012 B (West Virginia DWTRF Program), dated August 24, 2012, issued in the original aggregate principal amount of $444,835.

"Series 2012 C Bonds" means the Combined Utility System Revenue Bonds, Series 2012 C (Bank Qualified), dated October 5, 2012, issued in the original aggregate principal amount of $2,330,000.

"Series 2013 A Bonds" means the Combined Utility System Revenue Bonds, Series 2013 A (West Virginia Infrastructure Fund), dated August 22, 2013, issued in the original aggregate principal amount of $4,605,260.

"Series 2014 A Bonds Construction Trust Fund" means the Series 2014 A Bonds Construction Trust Fund established by Section 5.01 hereof.

"Series 2014 A Bonds" means the Combined Utility System Revenue Bonds, Series 2014 A (West Virginia SRF Program), of the Issuer, authorized by this Bond Legislation.

"Series 2014 A Bonds Reserve Account" means the Series 2014 A Bonds Reserve Account established by Section 5.02 hereof.

"Series 2014 A Bonds Reserve Requirement" means, as of any date of calculation, the maximum amount of principal and interest, if any, which will become due on the Series 2014 A Bonds in the then current or any succeeding year.

"Series 2014 A Bonds Sinking Fund" means the Series 2014 A Bonds Sinking Fund established by Section 5.02 hereof.

"Sinking Funds" means, collectively, the respective Sinking Funds established for the Series 2014 A Bonds and the Prior Bonds.

"SRF Administrative Fee" means any administrative fee required to be paid pursuant to the Bond Purchase Agreement.

"SRF Program" means the State's Water Pollution Control Revolving Fund Program, under which the Authority purchases the water pollution control revenue bonds of local governmental entities satisfying certain legal and other requirements with the proceeds of a capitalization grant award from the United States Environmental Protection Agency and funds of the State.

"SRF Regulations" means the regulations set forth in Title 47, Series 31 of the West Virginia Code of State Regulations.

"State" means the State of West Virginia.

"Supplemental Resolution" means any resolution, ordinance or order of the Issuer supplementing or amending this Ordinance and, when preceded by the article "the," refers specifically to the supplemental resolution authorizing the sale of the Series 2014 A Bonds; provided, that any matter intended by this Ordinance to be included in the Supplemental Resolution with respect to the Series 2014 A Bonds, and not so included may be included in another Supplemental Resolution.

"Surplus Revenues" means the Net Revenues not required by the Bond Legislation to be set aside and held for the payment of or security for the Series 2014 Bonds, the Prior Bonds or any other obligations of the Issuer, including, without limitation, the Depreciation Fund, the Sinking Funds and the Reserve Accounts.

"System" means, collectively, the complete existing public combined waterworks, sewerage, and stormwater system of the Issuer, as presently existing in its entirety or any integral part thereof, and shall include the Project and any additions, betterments and improvements thereto hereafter acquired or constructed for the System from any sources whatsoever, both within and without the Issuer.

"Tap Fees" means the fees, if any, paid by prospective customers of the System in order to connect thereto.

Additional terms and phrases are defined in this Ordinance as they are used. Words importing singular number shall include the plural number in each case and vice versa; words importing persons shall include firms and corporations; and words importing the masculine, feminine or neutral gender shall include any other gender.

ARTICLE II

AUTHORIZATION OF ACQUISITION AND CONSTRUCTION OF THE PROJECT

Section 2.01. Authorization of Acquisition and Construction of the Project. There is hereby authorized and ordered the acquisition and construction of the Project, at an estimated cost of not to exceed $2,227,700, in accordance with the plans and specifications which have been prepared by the Consulting Engineers, heretofore filed in the office of the Governing Body. The proceeds of the Series 2014 A Bonds hereby authorized shall be applied as provided in Article VI hereof. The Issuer has received bids and will enter into contracts for the acquisition and construction of the Project, compatible with the financing plan submitted to the DEP and the Authority.

The cost of the Project is estimated not to exceed $2,227,700, of which not to exceed $1,250,000 will be obtained from proceeds of the Series 2014 A Bonds and approximately $820,000 will be obtained from proceeds of a grant from the West Virginia Infrastructure & Jobs Development Council; $100,000 will be obtained as a grant from the Monongalia County Commission and $57,700 will be obtained as a contribution from the Morgantown Utility Board.

ARTICLE III

AUTHORIZATION, TERMS, EXECUTION, REGISTRATION AND SALE OF BONDS; AUTHORIZATION AND EXECUTION OF BOND PURCHASE AGREEMENT

Section 3.01. Authorization of Bonds. For the purposes of capitalizing interest on the Series 2014 A Bonds, if any, funding a reserve account or purchasing a surety bond to fund a reserve account for the Series 2014 A Bonds, paying Costs of the Project not otherwise provided for and paying certain costs of issuance of the Series 2014 A Bonds and related costs, or any or all of such purposes, as determined by the Supplemental Resolution, there shall be issued the negotiable Series 2014 A Bonds of the Issuer. The Series 2014 A Bonds shall be issued in one or more series, designated as "Combined Utility System Revenue Bonds, Series 2014 A (West Virginia SRF Program)," in the principal amount of not more than $1,250,000, and shall have

such terms as set forth hereinafter and in the Supplemental Resolution. The proceeds of the Series 2014 A Bonds remaining after purchasing a surety bond to fund the Series 2014 A Bonds Reserve Account or cash funding the Series 2014 A Bonds Reserve Account (if funded from Bond proceeds) and capitalization of interest, if any, shall be deposited in or credited to the Series 2014 A Bonds Construction Trust Fund established by Section 5.01 hereof, and applied as set forth in Article VI hereof.

Section 3.02. Terms of Bonds. The Series 2014 A Bonds shall be issued in such principal amount; shall bear interest at such rate or rates, not exceeding the then legal maximum, payable quarterly on such dates; shall mature on such dates and in such amounts; and shall be redeemable, in whole or in part, all as the Issuer shall prescribe in a Supplemental Resolution or as specifically provided in the Bond Purchase Agreement. The Series 2014 A Bonds shall be payable as to principal at the office of the Paying Agent, in any coin or currency which, on the dates of payment of principal is legal tender for the payment of public or private debts under the laws of the United States of America. Interest, if any, on the Series 2014 A Bonds shall be paid by check or draft of the Paying Agent or its agent, mailed to the Registered Owner thereof at the address as it appears on the books of the Bond Registrar, or by such other method as shall be mutually agreeable so long as the Authority is the Registered Owner thereof.

As provided by the Supplemental Resolution, the Series 2014 A Bonds shall initially be issued in one or more series, fully registered to the Authority, with a record of advances and a debt service schedule attached, representing the aggregate principal amount of the respective Series 2014 A Bonds. The Series 2014 A Bonds shall be exchangeable at the option and expense of the Registered Owner for another fully registered Bond or Bonds of the same series in aggregate principal amount equal to the amount of said Bonds then Outstanding and being exchanged, with principal installments or maturities, as applicable, corresponding to the dates of payment of principal installments of said Bonds; provided, that the Authority shall not be obligated to pay any expenses of such exchange.

Subsequent series of Bonds, if any, shall be issued in fully registered form and in denominations as determined by a Supplemental Resolution. Such Bonds shall be dated and shall bear interest, if any, as set forth in a Supplemental Resolution.

Section 3.03. Execution of Bonds. The Series 2014 A Bonds shall be executed in the name of the Issuer by the Mayor and the City Manager, and the seal of the Issuer shall be affixed thereto or imprinted thereon and attested by the City Clerk. In case any one or more of the officers who shall have signed or sealed the Series 2014 A Bonds shall cease to be such officer of the Issuer before the Series 2014 A Bonds so signed and sealed have been actually sold and delivered, such Bonds may nevertheless be sold and delivered as herein provided and may be issued as if the person who signed or sealed such Bonds had not ceased to hold such office. Any Series 2014 A Bonds may be signed and sealed on behalf of the Issuer by such person as at the actual time of the execution of such Bonds shall hold the proper office in the Issuer, although at the date of such Bonds such person may not have held such office or may not have been so authorized.

Section 3.04. Authentication and Registration. No Series 2014 A Bonds shall be valid or obligatory for any purpose or entitled to any security or benefit under this Bond Legislation unless and until the Certificate of Authentication and Registration on such Bond, substantially in the form set forth in Section 3.10 hereof shall have been manually executed by the Bond Registrar. Any such executed Certificate of Authentication and Registration upon any such Bond shall be conclusive evidence that such Bond has been authenticated, registered and

delivered under this Bond Legislation. The Certificate of Authentication and Registration on any Series 2014 A Bonds shall be deemed to have been executed by the Bond Registrar if manually signed by an authorized officer of the Bond Registrar, but it shall not be necessary that the same officer sign the Certificate of Authentication and Registration on all of the Bonds issued hereunder.

Section 3.05. Negotiability, Transfer and Registration. Subject to the provisions for transfer of registration set forth below, the Series 2014 A Bonds shall be and have all of the qualities and incidents of negotiable instruments under the Uniform Commercial Code of the State of West Virginia, and each successive Holder, in accepting the Series 2014 A Bonds shall be conclusively deemed to have agreed that such Bonds shall be and have all of the qualities and incidents of negotiable instruments under the Uniform Commercial Code of the State of West Virginia, and each successive Holder shall further be conclusively deemed to have agreed that said Bonds shall be incontestable in the hands of a bona fide holder for value.

So long as the Series 2014 A Bonds remain outstanding, the Issuer, through the Bond Registrar or its agent, shall keep and maintain books for the registration and transfer of such Bonds.

The registered Series 2014 A Bonds shall be transferable only upon the books of the Bond Registrar, by the registered owner thereof in person or by his attorney duly authorized in writing, upon surrender thereto together with a written instrument of transfer satisfactory to the Bond Registrar duly executed by the registered owner or his duly authorized attorney.

In all cases in which the privilege of exchanging Series 2014 A Bonds or transferring the registered Series 2014 A Bonds are exercised, all Series 2014 A Bonds shall be delivered in accordance with the provisions of this Bond Legislation. All Series 2014 A Bonds surrendered in any such exchanges or transfers shall forthwith be canceled by the Bond Registrar. For every such exchange or transfer of Series 2014 A Bonds, the Bond Registrar may make a charge sufficient to reimburse it for any tax, fee or other governmental charge required to be paid with respect to such exchange or transfer and the cost of preparing each new Bond upon each exchange or transfer, and any other expenses of the Bond Registrar incurred in connection therewith, which sum or sums shall be paid by the Issuer. The Bond Registrar shall not be obliged to make any such exchange or transfer of Series 2014 A Bonds during the period commencing on the 15th day of the month next preceding an interest payment date on the Series 2014 A Bonds or, in the case of any proposed redemption of Series 2014 A Bonds, next preceding the date of the selection of Bonds to be redeemed, and ending on such interest payment date or redemption date.

Section 3.06. Bonds Mutilated, Destroyed, Stolen or Lost. In case any Series 2014 A Bonds shall become mutilated or be destroyed, stolen or lost, the Issuer may, in its discretion, issue, and the Bond Registrar shall, if so advised by the Issuer, authenticate and deliver, a new Bond of the same series and of like tenor as the Bonds so mutilated, destroyed, stolen or lost, in exchange and substitution for such mutilated Bond, upon surrender and cancellation of such mutilated Bond, or in lieu of and substitution for the Bond destroyed, stolen or lost, and upon the Holder's furnishing satisfactory indemnity and complying with such other reasonable regulations and conditions as the Issuer may prescribe and paying such expenses as the Issuer and the Bond Registrar may incur. All Bonds so surrendered shall be canceled by the Bond Registrar and held for the account of the Issuer. If any such Bond shall have matured or be about to mature, instead of issuing a substitute Bond, the Issuer may pay the same, upon being indemnified as aforesaid, and if such Bond be lost, stolen or destroyed, without surrender thereof.

Section 3.07. Bonds not to be Indebtedness of the Issuer. The Series 2014 A Bonds shall not, in any event, be or constitute an indebtedness of the Issuer within the meaning of any constitutional or statutory provision or limitation, but shall be payable solely from the Gross Revenues derived from the System as herein provided. No Holder or Holders of the Series 2014 A Bonds shall ever have the right to compel the exercise of the taxing power of the Issuer to pay the Series 2014 A Bonds or the interest, if any, thereon.

Section 3.08. Bonds Secured by Pledge of Gross Revenues; Lien Position with respect to Prior Bonds. The payment of debt service of the Series 2014 A Bonds shall be secured by a first lien on the Gross Revenues derived from the System, on a parity with the lien on the Gross Revenues in favor of the Holders of the and the Prior Bonds. Such Gross Revenues in an amount sufficient to pay the principal of and interest, if any, on the Series 2014 A Bonds and the Prior Bonds and to make all other payments provided for in the Bond Legislation are hereby irrevocably pledged to such payments as they become due.

Section 3.09. Delivery of Bonds. The Issuer shall execute and deliver the Series 2014 A Bonds to the Registrar, and the Registrar shall authenticate, register and deliver the Series 2014 A Bonds to the original purchasers upon receipt of the documents set forth below:

A. If other than the Authority, a list of the names in which the Series 2014 A Bonds are to be registered upon original issuance, together with such taxpayer identification and other information as the Bond Registrar may reasonably require;

B. A request and authorization to the Bond Registrar on behalf of the Issuer, signed by an Authorized Officer, to authenticate and deliver the Series 2014 A Bonds to the original purchasers;

C. An executed and certified copy of the Bond Legislation;

D. An executed copy of the Bond Purchase Agreement; and

E. The unqualified approving opinion of bond counsel on the Series 2014 A Bonds.

Section 3.10. Form of Bonds. The text of the Series 2014 A Bonds shall be in substantially the following form, with such omissions, insertions and variations as may be necessary and desirable and authorized or permitted hereby, or by any Supplemental Resolution adopted prior to the issuance thereof:

[Remainder of Page Intentionally Blank]

(FORM OF SERIES 2014 A BOND)

UNITED STATES OF AMERICA
STATE OF WEST VIRGINIA
THE CITY OF MORGANTOWN
COMBINED UTILITY SYSTEM REVENUE BOND, SERIES 2014 A
(WEST VIRGINIA SRF PROGRAM)

No. AR-1 $_____

KNOW ALL MEN BY THESE PRESENTS: That on this the _____ day of _____, 2014, THE CITY OF MORGANTOWN, a municipal corporation and political subdivision of the State of West Virginia in Monongalia County of said State (the "Issuer"), for value received, hereby promises to pay, solely from the special funds provided therefor, as hereinafter set forth, to the WEST VIRGINIA WATER DEVELOPMENT AUTHORITY (the "Authority") or registered assigns the sum of _____ DOLLARS or such lesser amount as shall have been advanced to the Issuer hereunder and not previously repaid, as set forth in the "Record of Advances" attached as EXHIBIT A hereto and incorporated herein by reference, in quarterly installments on March 1, June 1, September 1 and December 1 of each year, commencing _____ 1, 20___, to and including _____ 1, 20___, as set forth on the "Debt Service Schedule" attached as EXHIBIT B hereto and incorporated herein by reference. The SRF Administrative Fee of _____% (as defined in the hereinafter described Bond Legislation) shall be payable quarterly on March 1, June 1, September 1, and December 1 of each year, commencing _____ 1, 20___, as set forth on EXHIBIT B attached hereto.

This bond shall bear no interest. Principal installments of this Bond are payable in any coin or currency which, on the respective dates of payment of such installments, is legal tender for the payment of public and private debts under the laws of the United States of America, at the office of the West Virginia Municipal Bond Commission, Charleston, West Virginia (the "Paying Agent").

This Bond may be redeemed prior to its stated date of maturity in whole or in part, but only with the express written consent of the Authority and the West Virginia Department of Environmental Protection (the "DEP"), and upon the terms and conditions prescribed by, and otherwise in compliance with, the Bond Purchase (the "Bond Purchase Agreement") by and among the Issuer, the Authority, and the DEP, dated _____, 20___.

This Bond is issued (i) to pay the costs of acquisition and construction of certain extensions, additions, betterments and improvements to the existing public sewerage system of the Issuer (the "Project"); and (ii) to pay certain costs of issuance of the Bonds of this Series (the "Bonds") and related costs. The existing public sewerage system of the Issuer, the Project, and any further extensions, additions, betterments or improvements thereto are herein called the "System." This Bond is issued under the authority of and in full compliance with the Constitution and statutes of the State of West Virginia, including particularly Chapter 8, Article 20 and Chapter 22C, Article 2 of the West Virginia Code of 1931, as amended (collectively, the "Act"), a Bond Ordinance duly enacted by the Issuer on _____, 20__, and a Supplemental Resolution duly adopted by the Issuer on _____, 20__ (collectively, the "Bond

Legislation"), and is subject to all the terms and conditions thereof. The Bond Legislation provides for the issuance of additional bonds under certain conditions, and such bonds would be entitled to be paid and secured equally and ratably from and by the funds and revenues and other security provided for the Bonds under the Bond Legislation.

THIS BOND IS ISSUED ON A PARITY WITH RESPECT TO LIENS, PLEDGE AND SOURCE OF AND SECURITY FOR PAYMENT, AND IN ALL RESPECTS, WITH THE ISSUER'S:

(1) COMBINED UTILITY SYSTEM REVENUE BONDS, SERIES 1995 (WEST VIRGINIA SRF PROGRAM), DATED APRIL 27, 1995, ISSUED IN THE ORIGINAL AGGREGATE PRINCIPAL AMOUNT OF $1,601,477 (THE "SERIES 1995 BONDS");

(2) COMBINED UTILITY SYSTEM REVENUE BONDS, SERIES 2000 A (WEST VIRGINIA SRF PROGRAM), DATED FEBRUARY 29, 2000, ISSUED IN THE ORIGINAL AGGREGATE PRINCIPAL AMOUNT OF $7,842,000 (THE "SERIES 2000 A BONDS");

(3) COMBINED UTILITY SYSTEM REVENUE BONDS, SERIES 2000 B (WEST VIRGINIA INFRASTRUCTURE FUND), DATED FEBRUARY 29, 2000, ISSUED IN THE ORIGINAL AGGREGATE PRINCIPAL AMOUNT OF $2,488,000 (THE "SERIES 2000 B BONDS");

(4) COMBINED UTILITY SYSTEM REVENUE BONDS, SERIES 2001 A (WEST VIRGINIA INFRASTRUCTURE FUND), DATED FEBRUARY 8, 2001, ISSUED IN THE ORIGINAL AGGREGATE PRINCIPAL AMOUNT OF $3,812,470 (THE "SERIES 2001 A BONDS");

(5) COMBINED UTILITY SYSTEM REVENUE BONDS, SERIES 2006 A (WEST VIRGINIA SRF PROGRAM), DATED JUNE 30, 2006, ISSUED IN THE ORIGINAL AGGREGATE PRINCIPAL AMOUNT OF $6,410,191 (THE "SERIES 2006 A BONDS");

(6) COMBINED UTILITY SYSTEM REVENUE BONDS, SERIES 2007 A (WEST VIRGINIA SRF PROGRAM), DATED AUGUST 14, 2007, ISSUED IN THE ORIGINAL AGGREGATE PRINCIPAL AMOUNT OF $8,500,000 (THE "SERIES 2007 A BONDS");

(7) COMBINED UTILITY SYSTEM REVENUE BONDS, SERIES 2010 A (DIRECT PAYMENT BUILD AMERICA BONDS), DATED JANUARY 28, 2010, ISSUED IN THE ORIGINAL AGGREGATE PRINCIPAL AMOUNT OF $37,950,000 (THE "SERIES 2010 A BONDS");

(8) COMBINED UTILITY SYSTEM REVENUE BONDS, SERIES 2010 B (WEST VIRGINIA SRF PROGRAM/ARRA), DATED JANUARY 28, 2010, ISSUED IN THE ORIGINAL AGGREGATE PRINCIPAL AMOUNT OF $81,600 (THE "SERIES 2010 B BONDS");

(9) COMBINED UTILITY SYSTEM REVENUE BONDS, SERIES 2010 C (WEST VIRGINIA SRF PROGRAM), DATED JANUARY 28, 2010, ISSUED IN THE ORIGINAL AGGREGATE PRINCIPAL AMOUNT OF $15,380,227 (THE "SERIES 2010 C BONDS");

(10) COMBINED UTILITY SYSTEM REVENUE BONDS, SERIES 2010 D (WEST VIRGINIA DWTRF PROGRAM), DATED JANUARY 28, 2010, ISSUED IN THE ORIGINAL AGGREGATE PRINCIPAL AMOUNT OF $9,317,286 (THE "SERIES 2010 D BONDS");

(11) COMBINED UTILITY SYSTEM REVENUE BONDS, SERIES 2010 E (WEST VIRGINIA DWTRF PROGRAM/ARRA), DATED JANUARY 28, 2010, ISSUED IN THE ORIGINAL AGGREGATE PRINCIPAL AMOUNT OF $100,000 (THE "SERIES 2010 E BONDS");

(12) COMBINED UTILITY SYSTEM REVENUE BONDS, SERIES 2010 F (BANK QUALIFIED), DATED JANUARY 28, 2010, ISSUED IN THE ORIGINAL AGGREGATE AMOUNT OF $7,250,000 (THE "SERIES 2010 F BONDS"),

(13) COMBINED UTILITY SYSTEM REVENUE BONDS, SERIES 2012 A (WEST VIRGINIA DWTRF PROGRAM), DATED AUGUST 24, 2012, ISSUED IN THE ORIGINAL AGGREGATE PRINCIPAL AMOUNT OF $570,000 (THE "SERIES 2012 A BONDS");

(14) COMBINED UTILITY SYSTEM REVENUE BONDS, SERIES 2012 B (WEST VIRGINIA DWTRF PROGRAM), DATED AUGUST 24, 2012, ISSUED IN THE ORIGINAL AGGREGATE PRINCIPAL AMOUNT OF $444,835 (THE "SERIES 2012 B BONDS");

(15) COMBINED UTILITY SYSTEM REVENUE BONDS, SERIES 2012 C (BANK QUALIFIED), DATED OCTOBER 5, 2012, ISSUED IN THE ORIGINAL AGGREGATE PRINCIPAL AMOUNT OF $2,330,000 (THE "SERIES 2012 C BONDS"); AND

(16) COMBINED UTILITY SYSTEM REVENUE BONDS, SERIES 2013 A (WEST VIRGINIA INFRASTRUCTURE FUND), DATED AUGUST 22, 2013, ISSUED IN THE ORIGINAL AGGREGATE PRINCIPAL AMOUNT OF $4,605,260 (THE "SERIES 2013 A BONDS"), (COLLECTIVELY, THE "PRIOR BONDS").

This Bond is payable only from and secured by a pledge of the Net Revenues (as defined in the Bond Legislation) to be derived from the operation of the System, on a parity with the pledge of Net Revenues in favor of the Holders of the Prior Bonds, and from monies in the Reserve Account created under the Bond Legislation for the Series 2014 A Bonds (the "Series 2014 A Bonds Reserve Account"), and unexpended proceeds of the Series 2014 A Bonds. Such Net Revenues shall be sufficient to pay the principal of and interest, if any, on all bonds which may be issued pursuant to the Act and which shall be set aside as a special fund hereby pledged for such purpose. This Bond does not constitute an indebtedness of the Issuer within the meaning of any constitutional or statutory provisions or limitations, nor shall the Issuer be obligated to pay the same, except from said special fund provided from the Net Revenues, the monies in the Series 2014 A Bonds Reserve Account and unexpended proceeds of the Series 2014 A Bonds. Pursuant to the Bond Legislation, the Issuer has covenanted and agreed to establish and maintain just and equitable rates and charges for the use of the System and the services rendered thereby, which shall be sufficient, together with other revenues of the System, to provide for the reasonable expenses of operation, repair and maintenance of the System, and to leave a balance each year equal to at least 115% of the maximum amount payable

in any year for principal of and interest, if any, on the Series 2014 A Bonds and all other obligations secured by a lien on or payable from such revenues on a parity with or junior or subordinate to the Series 2014 A Bonds including the Prior Bonds; provided however, that, so long as there exists in the Series 2014 A Bonds Reserve Account an amount at least equal to the maximum amount of principal and interest, if any, which will become due on the Series 2014 A Bonds in the then current or any succeeding year, and in the respective reserve accounts established for any other obligations Outstanding on a parity with or junior and subordinate to the Bonds, including the Prior Bonds, an amount at least equal to the requirement therefor, such percentage may be reduced to 110%. The Issuer has entered into certain further covenants with the Registered Owners of the Bonds for the terms of which reference is made to the Bond Legislation. Remedies provided the Registered Owners of the Bonds are exclusively as provided in the Bond Legislation, to which reference is here made for a detailed description thereof.

Subject to the registration requirements set forth herein, this Bond is transferable, as provided in the Bond Legislation, only upon the books of the Registrar (as defined in the Bond Legislation) by the Registered Owner, or by its attorney duly authorized in writing, upon the surrender of this Bond, together with a written instrument of transfer satisfactory to the Registrar, duly executed by the Registered Owner or its attorney duly authorized in writing.

Subject to the registration requirements set forth herein, this Bond, under the provision of the Act is, and has all the qualities and incidents of, a negotiable instrument under the Uniform Commercial Code of the State of West Virginia.

All money received from the sale of this Bond, after reimbursement and repayment of all amounts advanced for preliminary expenses as provided by law and the Bond Legislation, shall be applied solely to payment of the Costs of the Project and costs of issuance described in the Bond Legislation, and there shall be and hereby is created and granted a lien upon such monies, until so applied, in favor of the Registered Owner of this Bond.

IT IS HEREBY CERTIFIED, RECITED AND DECLARED that all acts, conditions and things required to exist, happen and be performed precedent to and in the issuance of this Bond do exist, have happened, and have been performed in due time, form and manner as required by law, and that the amount of this Bond, together with all other obligations of the Issuer, does not exceed any limit prescribed by the Constitution or statutes of the State of West Virginia and that a sufficient amount of the Net Revenues of the System has been pledged to and will be set aside into said special fund by the Issuer for the prompt payment of the principal of and interest, if any, on this Bond.

All provisions of the Bond Legislation, resolutions and statutes under which this Bond is issued shall be deemed to be a part of the contract evidenced by this Bond to the same extent as if written fully herein.

IN WITNESS WHEREOF, THE CITY OF MORGANTOWN has caused this Bond to be signed by its Mayor and City Manager, and its corporate seal to be hereunto affixed and attested by its City Clerk, and has caused this Bond to be dated the day and year first written above.

[SEAL]

By: _____
Mayor

By: _____
City Manager

ATTEST:

By: _____
City Clerk

CERTIFICATE OF AUTHENTICATION AND REGISTRATION

This Bond is one of the Series 2014 A Bonds described in the within-mentioned Bond Legislation and has been duly registered in the name of the registered owner set forth above, as of the date set forth below.

Date: _____, 2014.

THE HUNTINGTON NATIONAL BANK,
as Registrar

By: _____
Its: Authorized Officer

EXHIBIT A

RECORD OF ADVANCES

AMOUNT	DATE	AMOUNT	DATE
(1) $		(19)	
(2)		(20)	
(3)		(21)	
(4)		(22)	
(5)		(23)	
(6)		(24)	
(7)		(25)	
(8)		(26)	
(9)		(27)	
(10)		(28)	
(11)		(29)	
(12)		(30)	
(13)		(31)	
(14)		(32)	
(15)		(33)	
(16)		(34)	
(17)		(35)	
(18)		(36)	

TOTAL $_____

EXHIBIT B

DEBT SERVICE SCHEDULE

(Form of)

ASSIGNMENT

FOR VALUE RECEIVED the undersigned sells, assigns, and transfers unto _____ the within Bond and does hereby irrevocably constitute and appoint _____, Attorney to transfer the said Bond on the books kept for registration of the within Bond of the said Issuer with full power of substitution in the premises.

Dated: _____, 20____.

_____

In the presence of:

_____

Section 3.11. Sale of Bonds; Approval and Ratification of Execution of Bond Purchase Agreement. The Series 2014 A Bonds shall be sold to the Authority, pursuant to the terms and conditions of the Bond Purchase Agreement. If not so authorized by previous ordinance or resolution, the Mayor and the City Manager are specifically authorized and directed to execute the Bond Purchase Agreement in the form approved by Supplemental Resolution, and the City Clerk is directed to affix the seal of the Issuer, attest the same and deliver the Bond Purchase Agreement to the Authority, and any such prior execution and delivery is hereby authorized, approved, ratified and confirmed.

Section 3.12. Filing of Amended Schedule. Upon completion of the acquisition and construction of the Project, the Board will file with the Authority and the DEP, a schedule, the form of which will be provided by the DEP, setting forth the actual costs of the Project and sources of funds therefor.

ARTICLE IV

[RESERVED]

ARTICLE V

FUNDS AND ACCOUNTS; SYSTEM REVENUES AND APPLICATION THEREOF

Section 5.01. Establishment of Funds and Accounts with Depository Bank. The following special funds or accounts are hereby created with (or continued if previously established by the Prior Ordinances) and shall be held by the Depository Bank, separate and apart from all other funds or accounts of the Depository Bank or the Issuer and from each other:

(1) Revenue Fund (established by the Prior Ordinances);

(2) Depreciation Fund (established by the Prior Ordinances);

(3) Operation and Maintenance Fund (established by the Prior Ordinances); and

(4) Series 2014 A Bonds Construction Trust Fund.

Section 5.02. Establishment of Funds and Accounts with Commission. The following special funds or accounts are hereby created with and shall be held by the Commission, separate and apart from all other funds or accounts of the Commission or the Issuer and from each other:

(1) Series 1995 Bonds Sinking Fund (established by Prior Ordinances);

(2) Series 1995 Bonds Reserve Account established by Prior Ordinances);

(3) Series 2000 A Bonds Sinking Fund (established by Prior Ordinances);

(4) Series 2000 A Bonds Reserve Account established by Prior Ordinances);

(5) Series 2000 B Bonds Sinking Fund (established by Prior Ordinances);

(6) Series 2000 B Bonds Reserve Account established by Prior Ordinances);

(7) Series 2001 A Bonds Sinking Fund (established by Prior Ordinances);

(8) Series 2001 A Bonds Reserve Account established by Prior Ordinances);

(9) Series 2006 A Bonds Sinking Fund (established by Prior Ordinances);

(10) Series 2006 A Bonds Reserve Account established by Prior Ordinances);

(11) Series 2007 A Bonds Sinking Fund (established by Prior Ordinances);

(12) Series 2007 A Bonds Reserve Account established by Prior Ordinances);

(13) Series 2010 A Bonds Sinking Fund (established by Prior Ordinances);

(14) Series 2010 A Bonds Reserve Account (established by Prior Ordinances);

(15) Series 2010 C Bonds Sinking Fund (established by Prior Ordinances);

(16) Series 2010 C Bonds Reserve Account (established by Prior Ordinances);

(17) Series 2010 D Bonds Sinking Fund (established by Prior Ordinances);

(18) Series 2010 D Bonds Reserve Account (established by Prior Ordinances);

(19) Series 2010 E Bonds Sinking Fund (established by Prior Ordinances);

(20) Series 2010 E Bonds Reserve Account (established by Prior Ordinances);

(21) Series 2010 F Bonds Sinking Fund (established by Prior Ordinances);

(22) Series 2010 F Bonds Reserve Account (established by Prior Ordinances);

(23) Series 2012 A Bonds Sinking Fund (established by Prior Ordinances);

(24) Series 2012 A Bonds Reserve Account (established by Prior Ordinances);

(25) Series 2012 C Bonds Sinking Fund (established by Prior Ordinances);

(26) Series 2012 C Bonds Reserve Account (established by Prior Ordinances);

(27) Series 2013 A Bonds Sinking Fund; (established by Prior Ordinances);

(28) Series 2013 A Bonds Reserve Account, (established by Prior Ordinances);

(29) Series 2014 A Bonds Sinking Fund; and

(30) Series 2014 A Bonds Reserve Account

Section 5.03. System Revenues; Flow of Funds. A. The entire Gross Revenues derived from the operation of the System and all parts thereof shall be deposited upon receipt by the Issuer in the Revenue Fund. The Revenue Fund shall constitute a trust fund for the purposes provided in the Prior Ordinances and this Bond Legislation and shall be kept separate and distinct from all other funds of the Issuer and the Depository Bank and used only for the purposes and in the manner provided in the Prior Ordinances and this Bond Legislation. All moneys at any time on deposit in the Revenue Fund shall be disposed of only in the following manner and order of priority:

(1) The Issuer shall first, on the first day of each month, transfer from the Revenue Fund and simultaneously remit to the Commission the amounts required by the Prior Ordinances to pay interest on the Series 1995 Bonds, Series 2001 A Bonds, Series 2006 A Bonds, Series 2007 A Bonds, Series 2010 A Bonds, Series 2010 C Bonds, Series 2010 D Bonds, Series 2010 E Bonds, Series 2010 F Bonds, Series 2012 A Bonds and Series 2010 C Bonds.

(2) The Issuer shall next, on the first day of each month, transfer from the Revenue Fund and simultaneously remit to the Commission (i) the amounts required by the Prior Ordinances to pay the principal of the Prior Bonds; and (ii) to the Commission commencing 4 months prior to the first date of payment of

principal of the Series 2014 A Bonds, for deposit in the Series 2014 A Bonds Sinking Fund, an amount equal to 1/3rd of the amount of principal which will mature and become due on the Series 2014 A Bonds on the next ensuing quarterly principal payment date; provided that, in the event the period to elapse between the date of such initial deposit in the Series 2014 A Bonds Sinking Fund and the next quarterly principal payment date is less than 3 months, then such monthly payments shall be increased proportionately to provide, 1 month prior to the next quarterly principal payment date, the required amount of principal coming due on such date.

(3) The Issuer shall next, on the first day of each month, transfer from the Revenue Fund and simultaneously remit to the Commission (i) for deposit in the respective Reserve Accounts for the Prior Bonds, the amounts required by the Prior Ordinances; (ii) commencing 4 months prior to the first date of payment of principal of the Series 2014 A Bonds, if not fully funded upon issuance of the Series 2014 A Bonds or otherwise provided for pursuant to a surety bond, for deposit in the Series 2014 A Bonds Reserve Account, an amount equal to 1/120th of the Series 2014 A Bonds Reserve Requirement; provided, that no further payments shall be made into the Series 2014 A Bonds Reserve Account when there shall have been deposited therein, and as long as there shall remain on deposit therein, an amount equal to the Series 2014 A Bonds Reserve Requirement.

(4) The Issuer shall next, each month, transfer from the Revenue Fund and deposit in the Operation and Maintenance Fund, an amount sufficient to pay the current Operating Expenses of the System.

(5) The Issuer shall next, from the moneys remaining in the Revenue Fund, on the first day of each month transfer to the Depreciation Fund, an amount equal to 2 1/2% of the Gross Revenues each month (as previously set forth in the Prior Ordinances and not in addition thereto), exclusive of any payments for account of any Reserve Account. All funds in the Depreciation Fund shall be kept apart from all other funds of the Issuer or of the Depository Bank and shall be invested and reinvested in accordance with Article VIII hereof. Withdrawals and disbursements may be made from the Depreciation Fund for replacements, emergency repairs, improvements or extensions to the System; provided, that any deficiencies in the Reserve Accounts (except to the extent such deficiency exists because the required payments into such accounts have not, as of the date of determination of a deficiency, funded such accounts to the maximum extent required hereof) shall be promptly eliminated with moneys from the Depreciation Fund.

(6) After making all of the foregoing deposits and payments, any excess moneys then remaining in the Revenue Fund ("Surplus Revenues") may be used for any lawful purpose of the System.

Moneys in the Series 2014 A Bonds Sinking Fund shall be used only for the purposes of paying principal of and interest, if any, on the Series 2014 A Bonds, as the same shall become due. Moneys in the Series 2014 A Bonds Reserve Account shall be used only for the purpose of paying principal of and interest, if any, on the Series 2014 A Bonds, as the same shall come due, when other moneys in the Series 2014 A Bonds Sinking Fund are insufficient therefor, and for no other purpose.

All investment earnings on moneys in the Series 2014 A Bonds Sinking Fund and the Series 2014 A Bonds Reserve Account shall be returned, not less than once each year, by the Commission to the Issuer, and such amounts shall, during construction of the Project, be deposited in the Series 2014 A Bonds Construction Trust Fund, and following completion of construction of the Project, shall be deposited in the Revenue Fund and applied in full, first to the next ensuing interest payment, if any, due on the Series 2014 A Bonds, and then to the next ensuing principal payment due thereon.

Any withdrawals from the Series 2014 A Bonds Reserve Account which results in a reduction in the balance therein to below the Series 2014 A Bonds Reserve Requirement shall be subsequently restored from the first Gross Revenues available after all required payments have been made in full in the order set forth above.

As and when additional Bonds ranking on a parity with the Series 2014 A Bonds are issued, provision shall be made for additional payments into the respective sinking fund sufficient to pay the interest, if any, on such additional parity Bonds and accomplish retirement thereof at maturity and to accumulate a balance in the respective reserve account in an amount equal to the requirement thereof.

The Issuer shall not be required to make any further payments into the Series 2014 A Bonds Sinking Fund or the Series 2014 A Bonds Reserve Account, when the aggregate amount of funds therein are at least equal to the aggregate principal amount of the Series 2014 A Bonds issued pursuant to this Bond Legislation then Outstanding and all interest to accrue until the maturity thereof.

Interest, principal or reserve payments, whether made for a deficiency or otherwise, shall be made on a parity and pro rata, with respect to the Prior Bonds and the Series 2014 A Bonds, in accordance with the respective principal amounts then Outstanding.

The Commission is hereby designated as the fiscal agent for the administration of the Series 2014 A Bonds Sinking Fund and Series 2014 A Bonds Reserve Account created hereunder, and all amounts required for said accounts shall be remitted to the Commission from the Revenue Fund by the Issuer at the times provided herein. The Issuer shall make the necessary arrangements whereby required payments into said accounts shall be automatically debited from the Revenue Fund and electronically transferred to the Commission on the dates required hereunder.

Moneys in the Series 2014 A Bonds Sinking Fund and the Series 2014 A Bonds Reserve Account shall be invested and reinvested by the Commission in accordance with Section 8.01 hereof.

The Series 2014 A Bonds Sinking Fund and the Series 2014 A Bonds Reserve Account shall be used solely and only for, and are hereby pledged for, the purpose of servicing the Series 2014 A Bonds under the conditions and restrictions set forth herein.

B. The Issuer shall on the first day of each month (if such day is not a business day, then the next succeeding business day), deposit with the Commission the required interest, if any,, principal and reserve payments with respect to the Series 2014 A Bonds and all such payments shall be remitted to the Commission with appropriate instructions as to the custody, use and application thereof consistent with the provisions of this Bond Legislation. The Issuer

shall, on the first day of each month (if the first day is not a business day, then the first business day of each month) deposit with the Commission, the SRF Administrative Fee as set forth in the Schedule Y attached to the Bond Purchase Agreement.

C. Whenever all of the required and provided transfers and payments from the Revenue Fund into the several special funds, as hereinabove provided, are current and there remains in the Revenue Fund a balance in excess of the estimated amounts required to be so transferred and paid into such funds during the following month or such other period as required by the Act, such excess shall be considered as surplus revenues (the "Surplus Revenues"). Surplus Revenues may be used for any lawful purpose of the System.

D. The Issuer shall remit from the Revenue Fund to the Commission, the Registrar, the Paying Agent or the Depository Bank, on such dates as the Commission, the Registrar, the Paying Agent or the Depository Bank, as the case may be, shall require, such additional sums as shall be necessary to pay their respective charges and fees then due. In the case of payments to the Commission under this paragraph, the Issuer shall, make the necessary arrangements whereby such required payments shall be automatically debited from the Revenue Fund and electronically transferred to the Commission on the dates required.

E. The moneys in excess of the maximum amounts insured by FDIC in any of the funds and accounts shall at all times be secured, to the full extent thereof in excess of such insured sum, by Qualified Investments as shall be eligible as security for deposits of state and municipal funds under the laws of the State.

F. If on any monthly payment date the revenues are insufficient to place the required amount in any of the funds and accounts as hereinabove provided, the deficiency shall be made up in the subsequent payments in addition to the payments which would otherwise be required to be made into the funds and accounts on the subsequent payment dates; provided, however, that the priority of curing deficiencies in the funds and accounts herein shall be in the same order as payments are to be made pursuant to this Section 5.03, and the revenues shall be applied to such deficiencies before being applied to any other payments hereunder.

G. All remittances made by the Issuer to the Commission shall clearly identify the fund or account into which each amount is to be deposited.

H. The Gross Revenues of the System shall only be used for purposes of the System.

I. All Tap Fees, as received, shall be deposited in the Revenue Fund and may be used for any lawful purpose of the System.

Section 5.04. Reserve Account Letter of Credit or Surety Bond. With the advance written consent of the Authority, the Issuer may, in lieu of funding the Series 2014 A Bonds Reserve Account with cash or Qualified Investments, satisfy the respective Series 2014 A Bonds Reserve Requirement by obtaining a reserve account letter of credit, a surety bond, or other credit facility satisfactory to the Authority in an amount equal to the Series 2014 A Bonds Reserve Requirement. The Issuer hereby authorizes the purchase of a reserve account letter of credit, a surety bond, or other credit facility satisfactory to the Authority, all as set forth in a Supplemental Resolution, and the execution and delivery of any applicable reimbursement agreement or note in such forms as shall be described in a Supplemental Resolution.

ARTICLE VI

BOND PROCEEDS; CONSTRUCTION DISBURSEMENTS

Section 6.01. Application of Bond Proceeds; Pledge of Unexpended Bond Proceeds. From the moneys received from the sale of the Series 2014 A Bonds, the following amounts shall be first deducted and deposited in the order set forth below:

A. From the proceeds of the Series 2014 A Bonds, there shall first be deposited with the Commission in the Series 2014 A Bonds Sinking Fund, the amount, if any, set forth in the Supplemental Resolution as capitalized interest.

B. Next, from the proceeds of the Series 2014 A Bonds, the Issuer may purchase a surety bond to fund the Series 2014 A Bonds Reserve Account as set forth in the Supplemental Resolution, or there shall be deposited with the Commission in the Series 2014 A Bonds Reserve Account, the amount, if any, set forth in the Supplemental Resolution for funding of the Series 2014 A Bonds Reserve Account.

C. As the Issuer receives advances of the remaining moneys derived from the sale of the Series 2014 A Bonds, such moneys shall be deposited with the Depository Bank in the Series 2014 A Bonds Construction Trust Fund and applied solely to payment of the costs of the Project in the manner set forth in Section 6.02 hereof and until so expended, are hereby pledged as additional security for the Series 2014 A Bonds.

D. After completion of construction of the Project, as certified by the Consulting Engineers, and all costs have been paid, any remaining proceeds of the Series 2014 A Bonds shall be expended as approved by the DEP.

Section 6.02. Disbursements From the Series 2014 A Bond Construction Trust Fund. On or before the closing date, the Board shall have delivered to the Authority and the DEP a report listing the specific purposes for which the proceeds of the Series 2014 A Bonds will be expended and the disbursement procedures of such proceeds, including an estimated monthly draw schedule. Payments for Costs of the Project shall be made monthly.

The Issuer hereby appoints and designates the Board, and the Authorized Officers thereof, as its agent (i) for the review and approval of all invoices for the Project to be paid from the proceeds of the Series 2014 A Bonds; (ii) to take any and all actions necessary to apply for and obtain a commitment from the DEP, specifically including, but not limited to, any administrative loan documents required by DEP; and (iii) to act on and execute documents on behalf of the Issuer for any and all federal and state actions as they relate to the planning, design and/or construction of the Project.

Except as provided in Section 6.01 hereof, disbursements from the Series 2014 A Bonds Construction Trust Fund shall be made only after submission to, and approval from, the Authority and the DEP of a completed and signed "Payment Requisition Form," a form of which is attached to the Bond Purchase Agreement, in compliance with the construction schedule.

Pending such application, moneys in the Series 2014 A Bonds Construction Trust Fund shall be invested and reinvested in Qualified Investments at the written direction of the Issuer.

ARTICLE VII

ADDITIONAL COVENANTS OF THE ISSUER

Section 7.01. General Covenants of the Issuer. All the covenants, agreements and provisions of this Bond Legislation shall be and constitute valid and legally binding covenants of the Issuer and shall be enforceable in any court of competent jurisdiction by any Holder or Holders of the Series 2014 A Bonds. In addition to the other covenants, agreements and provisions of this Bond Legislation, the Issuer hereby covenants and agrees with the Holders of the Series 2014 A Bonds as hereinafter provided in this Article VII. All such covenants, agreements and provisions shall be irrevocable, except as provided herein, as long as any of the Series 2014 A Bonds or the interest, if any, thereon is Outstanding and unpaid.

Section 7.02. Bonds not to be Indebtedness of the Issuer. The Series 2014 A Bonds shall not be nor constitute an indebtedness of the Issuer within the meaning of any constitutional, statutory or charter limitation, but shall be payable solely from the funds pledged for such payment by this Bond Legislation. No Holder or Holders of the Series 2014 A Bonds shall ever have the right to compel the exercise of the taxing power of the Issuer to pay the Series 2014 A Bonds or the interest, if any, thereon.

Section 7.03. Bonds Secured by Pledge of Gross Revenues; Lien Position with respect to Prior Bonds. The payment of debt service of the Series 2014 A Bonds shall be secured by a first lien on the Gross Revenues derived from the System, on a parity with the lien on the Gross Revenues in favor of the Holders of the Prior Bonds. Such Gross Revenues in an amount sufficient to pay the principal of and interest, if any, on the Series 2014 A Bonds and the Prior Bonds and to make all other payments provided for in the Bond Legislation are hereby irrevocably pledged to such payments as they become due.

Section 7.04. Rates and Charges. The Issuer has obtained any and all approvals of rates and charges required by State law and has taken any other action required to establish and impose such rates and charges, with all requisite appeal periods having expired without successful appeal and the Issuer shall supply an opinion of counsel to such effect. Such rates and charges shall be sufficient to comply with the requirements of the Bond Purchase Agreement and the Issuer shall supply a certificate of certified public accountant to such effect. The initial schedule of rates and charges for the services and facilities of the System shall be as set forth in the water rate ordinance of the Issuer enacted June 21, 2011, the sewer rate ordinance of the Issuer enacted November 20, 2012, and the stormwater rate ordinance of the Issuer enacted December 6, 2011, which rates are incorporated herein by reference as a part hereof.

So long as the Series 2014 A Bonds are outstanding, the Issuer covenants and agrees to fix and collect rates, fees and other charges for the use of the System and to take all such actions necessary to provide funds sufficient to produce the required sums set forth in the Bond Legislation and in compliance with the Bond Purchase Agreement. In the event the schedule of rates, fees and charges initially established for the System in connection with the Series 2014 A Bonds shall prove to be insufficient to produce the required sums set forth in this Bond Legislation and the Bond Purchase Agreement, the Issuer hereby covenants and agrees that

it will, to the extent or in the manner authorized by law, immediately adjust and increase such schedule of rates, fees and charges and take all such actions necessary to provide funds sufficient to produce the required sums set forth in this Bond Legislation and the Bond Purchase Agreement.

Section 7.05. Sale of the System. So long as the Prior Bonds are outstanding, the Issuer shall not sell, mortgage, lease or otherwise dispose of or encumber the System, or any part thereof, except as provided in the Prior Ordinances. Additionally, so long as the Series 2014 A Bonds are outstanding and except as otherwise required by law or with the written consent of the DEP and the Authority, the System may not be sold, mortgaged, leased or otherwise disposed of, except as a whole, or substantially as a whole, and only if the net proceeds to be realized shall be sufficient to fully pay all the Bonds Outstanding, in accordance with Article X hereof. The proceeds from any such sale, mortgage, lease or other disposition of the System shall, with respect to the Series 2014 A Bonds, immediately be remitted to the Commission for deposit in the Series 2014 A Bonds Sinking Fund, and, with the written permission of the DEP and the Authority, or in the event the Authority is no longer a Bondholder, the Issuer shall direct the Commission to apply such proceeds to the payment of principal of and interest, if any, on the Series 2014 A Bonds. Any balance remaining after the payment of the Series 2014 A Bonds and interest, if any, thereon shall be remitted to the Issuer by the Commission unless necessary for the payment of other obligations of the Issuer payable out of the revenues of the System.

The foregoing provision notwithstanding, the Board shall have and hereby reserves the right to sell, lease or otherwise dispose of any of the property comprising a part of the System hereinafter determined in the manner provided herein to be no longer necessary, useful or profitable in the operation thereof. Prior to any such sale, lease or other disposition of such property, if the amount to be received therefor, together with all other amounts received during the same Fiscal Year for such sales, leases or other dispositions of such properties, is not in excess of $50,000, the Board shall, by resolution, determine that such property comprising a part of the System is no longer necessary, useful or profitable in the operation thereof and may then provide for the sale of such property. The proceeds of any such sale shall be deposited in the Revenue Fund. If the amount to be received from such sale, lease or other disposition of said property, together with all other amounts received during the same Fiscal Year for such sales, leases or other dispositions of such properties, shall be in excess of $50,000 but not in excess of $200,000, the Board shall first, determine, that such property comprising a part of the System is no longer necessary, useful or profitable in the operation thereof and may then, if it be so advised, by resolution duly adopted, authorize such sale, lease or other disposition of such property upon public bidding. The proceeds of any such sale shall be deposited in the Depreciation Fund. The payment of such proceeds into the Depreciation Fund shall not reduce the amount required to be paid into such account by other provisions of this Bond Legislation.

No sale, lease or other disposition of the properties of the System shall be made by the Board if the proceeds to be derived therefrom, together with all other amounts received during the same Fiscal Year for such sales, leases or other dispositions of such properties, shall be in excess of $200,000 and insufficient to pay all Bonds then Outstanding, without the prior approval and consent in writing of the Holders, or their duly authorized representatives, of the Bonds then Outstanding. The Issuer shall prepare the form of such approval and consent for execution by the then Holders of the Bonds for the disposition of the proceeds of the sale, lease or other disposition of such properties of the System.

Section 7.06. Issuance of Other Obligations Payable Out of Revenues and General Covenant Against Encumbrances. Except as provided for in Section 7.06 and Section 7.07

hereof, the Issuer shall not issue any other obligations whatsoever payable from the revenues of the System which rank prior to, or equally, as to lien on and source of and security for payment from such revenues with the Series 2014 A Bonds and the Prior Bonds. All obligations issued by the Issuer after the issuance of the Series 2014 A Bonds and payable from the revenues of the System, except such additional parity Bonds, shall contain an express statement that such obligations are junior and subordinate, as to lien on and source of and security for payment from such revenues and in all other respects, to the Series 2014 A Bonds; provided, that no such subordinate obligations shall be issued unless all payments required to be made into all funds and accounts established by this Bond Legislation have been made and are current at the time of the issuance of such subordinate obligations.

Except as provided above, the Issuer shall not create, or cause or permit to be created, any debt, lien, pledge, assignment, encumbrance or any other charge having priority over or being on a parity with the lien of the Series 2014 A Bonds, and the interest, if any, thereon, upon any of the income and revenues of the System pledged for payment of the Series 2014 A Bonds and the interest, if any, thereon in this Bond Legislation, or upon the System or any part thereof.

The Issuer shall give the Authority and the DEP prior written notice of its issuance of any other obligations to be used for the System, payable from the revenues of the System or from any grants for the Project, or any other obligations related to the Project or the System.

Section 7.07. Parity Bonds. So long as the Prior Bonds are outstanding, the limitations on the issuance of parity obligations set forth in the Prior Ordinances shall be applicable. In addition, no Parity Bonds, payable out of the revenues of the System, shall be issued after the issuance of the Series 2014 A Bonds pursuant to this Bond Legislation, without the prior written consent of the Authority and the DEP and without complying with the conditions and requirements herein provided (unless less restrictive than the provisions of the Prior Ordinances).

All Parity Bonds issued hereunder shall be on a parity in all respects with the Series 2014 A Bonds.

No such Parity Bonds shall be issued except for the purpose of financing the costs of design, acquisition or construction of extensions, additions, improvements or betterments to the System or refunding any outstanding Bonds, or both such purposes.

No Parity Bonds shall be issued at any time, however, unless and until there has been procured and filed with the City Clerk a written statement by the Independent Certified Public Accountants, reciting the conclusion that the Net Revenues actually derived, subject to the adjustments hereinafter provided for, from the System during any 12 consecutive months, within the 18 months immediately preceding the date of the actual issuance of such Parity Bonds, plus the estimated average increased annual Net Revenues expected to be received in each of the 3 succeeding years after the completion of the improvements to be financed by such Parity Bonds, if any, shall not be less than 115% of the largest aggregate amount that will mature and become due in any succeeding Fiscal Year for principal of and interest on the following:

(1) The Bonds then Outstanding;

(2) Any Parity Bonds theretofore issued pursuant to the provisions contained in this Bond Legislation then Outstanding; and

(3) The Parity Bonds then proposed to be issued.

The "estimated average increased annual Net Revenues expected to be received in each of the 3 succeeding years," as that term is used in the computation provided in the above paragraph, shall refer only to the increased Net Revenues estimated to be derived from the improvements to be financed by such Parity Bonds and any increase in rates enacted by the Issuer, the time for appeal of which shall have expired (without successful appeal) prior to the issuance of such Parity Bonds, and shall not exceed the amount to be stated in a certificate of the Independent Certified Public Accountants, which shall be filed in the office of the City Clerk prior to the issuance of such Parity Bonds.

The Net Revenues actually derived from the System during the 12 consecutive month period hereinabove referred to may be adjusted by adding to such Net Revenues such additional Net Revenues which would have been received, in the opinion of the Independent Certified Public Accountants, on account of increased rates, rentals, fees and charges for the System enacted by the Issuer, the time for appeal of which shall have expired (without successful appeal) prior to issuance of such Parity Bonds. For purposes of this test, the terms "Gross Revenues" and "Net Revenues" shall not include proceeds from the sale of capital assets.

All covenants and other provisions of this Bond Legislation (except as to details of such Parity Bonds inconsistent herewith) shall be for the equal benefit, protection and security of the Holders of the Bonds and the Holders of any Parity Bonds theretofore or subsequently issued from time to time within the limitations of and in compliance with this section. All Bonds, regardless of the time or times of their issuance, shall rank equally with respect to their lien on the Gross Revenues of the System, and their source of and security for payment from the Gross Revenues, without preference of any Bond over any other. The Issuer shall comply fully with all the increased payments into the various funds and accounts created in this Bond Legislation required for and on account of such Parity Bonds, in addition to the payments required for Bonds theretofore issued pursuant to this Bond Legislation.

Parity Bonds shall not be deemed to include bonds, notes, certificates or other obligations subsequently issued, the lien of which on the revenues of the System is subject to the prior and superior lien of the Series 2014 A Bonds on such revenues. The Issuer shall not issue any obligations whatsoever payable from revenues of the System, or any part thereof, which rank prior to or, except in the manner and under the conditions provided in this section, equally, as to lien on and source of and security for payment from such revenues, with the Series 2014 A Bonds.

No Parity Bonds shall be issued at any time, however, unless all of the payments into the respective funds and accounts provided for in this Bond Legislation with respect to the Bonds then Outstanding, and any other payments provided for in this Bond Legislation and the Prior Ordinances, shall have been made in full as required to the date of delivery of the Parity Bonds, and the Issuer then be in full compliance with all the covenants, agreements and terms of this Bond Legislation and the Prior Ordinances.

Section 7.08. Books; Records and Audit. The Board shall keep complete and accurate records of the cost of acquiring the Project site and the costs of acquiring, constructing and installing the Project. The Board shall permit the Authority and the DEP, or their agents and

representatives, to inspect all books, documents, papers and records relating to the Project and the System at all reasonable times for the purpose of audit and examination. The Board shall submit to the Authority and the DEP such documents and information as they may reasonably require in connection with the acquisition, construction and installation of the Project, the operation and maintenance of the System and the administration of the loan or any grants or other sources of financing for the Project.

The Board shall permit the Authority and the DEP, or their agents and representatives, to inspect all records pertaining to the operation and maintenance of the System at all reasonable times following completion of construction of the Project and commencement of operation thereof, or, if the Project is an improvement to an existing system, at any reasonable time following commencement of construction.

The Board will keep books and records of the System, which shall be separate and apart from all other books, records and accounts of the Issuer, in which complete and correct entries shall be made of all transactions relating to the System, and any Holder of a Bond or Bonds issued pursuant to this Bond Legislation shall have the right at all reasonable times to inspect the System and all parts thereof and all records, accounts and data of the Issuer relating thereto.

The accounting system for the System shall follow current generally accepted accounting principles and safeguards to the extent allowed and as prescribed by the Public Service Commission of West Virginia. Separate control accounting records shall be maintained by the Board. Subsidiary records as may be required shall be kept in the manner and on the forms, books and other bookkeeping records as prescribed by the Board. The Board shall prescribe and institute the manner by which subsidiary records of the accounting system which may be installed remote from the direct supervision of the Board shall be reported to such agent of the Issuer as the Board shall direct.

The Board shall file with the Authority and the DEP, or any other original purchaser of the Series 2014 A Bonds, and shall mail in each year to any Holder or Holders of the Series 2014 A Bonds, requesting the same, an annual report containing the following:

(A) A statement of Gross Revenues, Operating Expenses, Net Revenues and Surplus Revenues derived from and relating to the System.

(B) A balance sheet statement showing all deposits in all the funds and accounts provided for in this Bond Legislation and the status of all said funds and accounts.

(C) The amount of any Bonds, notes or other obligations payable from the revenues of the System outstanding.

The Board shall also, at least once a year, cause the books, records and accounts of the System to be audited by Independent Certified Public Accountant (and to the extent legally required, in compliance with the applicable OMB Circular, or any successor thereof, and the Single Audit Act, or any successor thereof), and shall mail upon request, and make available generally, the report of the Independent Certified Public Accountant, or a summary thereof, to any Holder or Holders of the Series 2014 A Bonds and shall submit said report to the Authority and the DEP, or any other original purchaser of the Series 2014 A Bonds. Such audit report submitted to the Authority and the DEP shall include a statement that notes whether the results of tests disclosed instances of noncompliance that are required to be reported under government

auditing standards and, if there are, describes the instances of noncompliance and the audited financial statements shall include a statement that notes whether the revenues of the System are adequate to meet the Issuer's Operating Expenses and debt service and reserve requirements.

Subject to the terms, conditions and provisions of the Bond Purchase Agreement and the Act, the Issuer has acquired, or shall do all things necessary to acquire, the proposed site of the Project and shall do, is doing or has done all things necessary to construct the Project in accordance with the plans, specifications and designs prepared by the Consulting Engineers. All real estate and interests in real estate and all personal property constituting the Project and the Project site heretofore or hereafter acquired shall at all times be and remain the property of the Issuer.

The Issuer shall provide the DEP with all appropriate documentation to comply with any special conditions established by federal and/or state regulations as set forth in Exhibit E of the Bond Purchase Agreement or as promulgated from time to time.

The Board shall permit the Authority and the DEP, or their agents and representatives, to enter and inspect the Project site and Project facilities at all reasonable times. Prior to, during and after completion of construction and commencement of operation of the Project, the Board shall also provide the Authority and the DEP, or their agents and representatives, with access to the System site and System facilities as may be reasonably necessary to accomplish all of the powers and rights of the Authority and the DEP with respect to the System pursuant to the Act.

Section 7.09. Rates. Prior to the issuance of the Series 2014 A Bonds, equitable rates or charges for the use of and service rendered by the System shall be established all in the manner and form required by law, and copies of such rates and charges so established will be continuously on file with the City Clerk, which copies will be open to inspection by all interested parties. The schedule of rates and charges shall at all times be adequate to produce Gross Revenues from the System sufficient to pay Operating Expenses and to make the prescribed payments into the funds created hereunder. Such schedule of rates and charges shall be changed and readjusted whenever necessary so that the aggregate of the rates and charges will be sufficient for such purposes. In order to assure full and continuous performance of this covenant, with a margin for contingencies and temporary unanticipated reduction in income and revenues, the Issuer hereby covenants and agrees that the schedule of rates or charges from time to time in effect shall be sufficient, together with other revenues of the System (i) to provide for all Operating Expenses of the System and (ii) to leave a balance each year equal to at least 115% of the maximum amount required in any year for payment of principal of and interest, if any, on the Series 2014 A Bonds and all other obligations secured by a lien on or payable from such revenues on a parity with the Series 2014 A Bonds, including the Prior Bonds; provided, that in the event that amounts equal to or in excess of the reserve requirements are on deposit in the Series 2014 A Bonds Reserve Account, and any reserve accounts for obligations on a parity with the Series 2014 A Bonds are funded at least at the requirement therefor, such balance each year need only equal at least 110% of the maximum amount required in any year for payment of principal of and interest, if any, on the Series 2014 A Bonds and all other obligations secured by a lien on or payable from such revenues on a parity with the Series 2014 A Bonds , including the Prior Bonds. In any event, the Issuer shall not reduce the rates or charges for services set forth in the rate ordinances described in Section 7.04.

Section 7.10. Operating Budget and Monthly Financial Report. The Board shall annually, at least 45 days preceding the beginning of each Fiscal Year, prepare and adopt by

resolution a detailed, balanced budget of the estimated revenues and expenditures for operation and maintenance of the System during the succeeding Fiscal Year and shall submit a copy of such budget to the Authority and the DEP within 30 days of adoption thereof.

Commencing on the date contracts are executed for the acquisition and construction of the Project and for 2 years following the completion of the Project, the Board shall each month complete a "Monthly Financial Report," a form of which is attached to the Bond Purchase Agreement, and forward a copy of such report to the Authority and the DEP by the 20th day of each month.

Section 7.11. Engineering Services and Operating Personnel. The Board shall obtain a certificate of the Consulting Engineers in the form attached to the Bond Purchase Agreement, stating, among other things, that the Project has been or will be constructed in accordance with the approved plans, specifications and designs as submitted to the Authority and the DEP, the Project is adequate for the purposes for which it was designed, the funding plan as submitted to the Authority and the DEP is sufficient to pay the costs of acquisition and construction of the Project, and all permits required by federal and state laws for construction of the Project have been obtained.

The Board shall provide and maintain competent and adequate engineering services satisfactory to the Authority and the DEP covering the supervision and inspection of the development and construction of the Project and bearing the responsibility of assuring that construction conforms to the plans, specifications and designs prepared by the Consulting Engineers, which have been approved by all necessary governmental bodies. Such engineer shall certify to the Authority and the DEP and the Issuer at the completion of construction that construction of the Project is in accordance with the approved plans, specifications and designs, or amendments thereto, approved by all necessary governmental bodies.

The Issuer shall require the Consulting Engineers to submit Record Drawings, as defined in the SRF Regulations, to it within 60 days of the completion of the Project. The Issuer shall notify the DEP in writing of such receipt. The Issuer shall submit a "Performance Certificate," a form of which is attached to the Bond Purchase Agreement as Exhibit A, to the DEP within 60 days of the end of the first year after the Project is completed.

The Issuer shall require the Consulting Engineers to submit the final Operation and Maintenance Manual, as defined in the SRF Regulations, to the DEP when the Project is 90% completed. The Issuer shall at all times provide operation and maintenance of the System in compliance with all state and federal standards.

The Issuer shall employ qualified operating personnel properly certified by the State before the Project is 50% complete and shall retain such a certified operator to operate the System during the entire term of the Bond Purchase Agreement. The Issuer shall notify the DEP in writing of the certified operator employed at the 50% completion stage.

The Issuer shall serve the additional customers at the location(s) as set forth in Certificate of Engineer. The Issuer shall not reduce the amount of additional customers served by the project without the prior written approval of the Board of the Water Development Authority. Following completion of the Project the Issuer shall certify to the Authority the number of customers added to the System.

Section 7.12. No Competing Franchise. To the extent legally allowable, the Issuer will not grant or cause, consent to or allow the granting of, any franchise or permit to any person, firm, corporation, body, agency or instrumentality whatsoever for the providing of any services which would compete with services provided by the System.

Section 7.13. Enforcement of Collections. The Board will diligently enforce and collect all fees, rentals or other charges for the services and facilities of the System, and take all steps, actions and proceedings for the enforcement and collection of such fees, rentals or other charges which shall become delinquent to the full extent permitted or authorized by the Act, the rules and regulations of the Public Service Commission of West Virginia and other laws of the State of West Virginia.

Whenever any fees, rates, rentals or other charges for the services and facilities of the System shall remain unpaid for a period of 20 days after the same shall become due and payable, the user of the services and facilities shall be delinquent until such time as all such rates and charges are fully paid. To the extent authorized by the laws of the State and the rules and regulations of the Public Service Commission of West Virginia, rates, rentals and other charges, if not paid, when due, shall become a lien on the premises served by the System. The Issuer further covenants and agrees that, it will, to the full extent permitted by law and the rules and regulations promulgated by the Public Service Commission of West Virginia, discontinue and shut off the services of the stormwater portion of the System and any services and facilities of the waterworks portion of the System, to all users of the services of the stormwater system delinquent in payment of charges for the services of the stormwater system and will not restore such services of either the waterworks system or the stormwater system until all delinquent charges for the services of the stormwater system, plus reasonable interest and penalty charges for the restoration of service, have been fully paid and shall take all further actions to enforce collections to the maximum extent permitted by law. If the waterworks facilities are not owned by the Issuer, the Issuer shall use diligent efforts to enter into a termination agreement with the provider of such water services, subject to any required approval of such agreements by the Public Service Commission of West Virginia.

Section 7.14. No Free Services. The Board will not render or cause to be rendered any free services of any nature by the System, nor will any preferential rates be established for users of the same class; and in the event the Issuer or the Board, or any department, agency, instrumentality, officer or employee of either shall avail itself or themselves of the facilities or services provided by the System, or any part thereof, the same rates, fees or charges applicable to other customers receiving like services under similar circumstances shall be charged the Issuer, the Board and any such department, agency, instrumentality, officer or employee. The revenues so received shall be deemed to be revenues derived from the operation of the System, and shall be deposited and accounted for in the same manner as other revenues derived from such operation of the System.

Section 7.15. Insurance and Construction Bonds. A. The Board hereby covenants and agrees that so long as the Series 2014 A Bonds remain Outstanding, the Board will, as an Operating Expense, procure, carry and maintain insurance with a reputable insurance carrier or carriers as is customarily covered with respect to works and properties similar to the System. Such insurance shall initially cover the following risks and be in the following amounts:

(1) FIRE, LIGHTNING, VANDALISM, MALICIOUS MISCHIEF AND EXTENDED COVERAGE INSURANCE, on all above-ground insurable portions of the System in an amount equal to

the actual cost thereof. In time of war the Board will also carry and maintain insurance to the extent available against the risks and hazards of war. The proceeds of all such insurance policies shall be placed in the Depreciation Fund and used only for the repairs and restoration of the damaged or destroyed properties or for the other purposes provided herein for the Depreciation Fund. The Board will itself, or will require each contractor and subcontractor to, obtain and maintain builder's risk insurance (fire and extended coverage) to protect the interests of the Issuer, the Board, the Authority, the prime contractor and all subcontractors as their respective interests may appear, in accordance with the Bond Purchase Agreement, during construction of the Project on a 100% basis (completed value form) on the insurable portion of the Project, such insurance to be made payable to the order of the Authority, the Issuer, the Board, the contractors and subcontractors, as their interests may appear.

(2) PUBLIC LIABILITY INSURANCE, with limits of not less than $1,000,000 per occurrence to protect the Board from claims for bodily injury and/or death and not less than $500,000 per occurrence from claims for damage to property of others which may arise from the operation of the System, and insurance with the same limits to protect the Issuer and the Board from claims arising out of operation or ownership of motor vehicles of or for the System.

(3) WORKERS' COMPENSATION COVERAGE FOR ALL EMPLOYEES OF OR FOR THE SYSTEM ELIGIBLE THEREFOR; AND PERFORMANCE AND PAYMENT OR COMPLETION BONDS, such bonds to be in the amounts of not less than 100% of the amount of any construction contract and to be required of each contractor dealing directly with the Board and such payment bonds will be filed with the Clerk of the County Commission of the County in which such work is to be performed prior to commencement of construction of any additions, extensions or improvements for the System in compliance with West Virginia Code, Section 38-2-39.

(4) FIDELITY BONDS will be provided as to every officer and employee of the Board or the Issuer having custody of the revenues or of any other funds of the System, in an amount at least equal to the total funds in the custody of any such person at any one time.

(5) FLOOD INSURANCE, if the System facilities are or will be located in designated special flood or mudslide-prone areas and to the extent available at reasonable cost to the Issuer.

(6) BUSINESS INTERRUPTION INSURANCE, to the extent available at reasonable cost to the Issuer.

B. The Board shall require all contractors engaged in the construction of the Project to furnish a performance bond and a payment bond, each in an amount equal to 100% of the contract price of the portion of the Project covered by the particular contract as security for

the faithful performance of such contract. The Board shall verify such bonds prior to commencement of construction.

The Board shall also require all contractors engaged in the construction of the Project to carry such workers' compensation coverage for all employees working on the Project and public liability insurance, vehicular liability insurance and property damage insurance in amounts adequate for such purposes and as is customarily carried with respect to works and properties similar to the Project; provided that the amounts and terms of such coverage are satisfactory to the Authority and the DEP. The Board shall verify such insurance prior to commencement of construction. In the event the Bond Purchase Agreement so requires, such insurance shall be made payable to the order of the Authority, the Issuer, the Board, the prime contractor and all subcontractors, as their interests may appear.

Section 7.16. Mandatory Use. The mandatory use of the stormwater facilities of the System is essential and necessary for the protection and preservation of the public health, comfort, safety, convenience and welfare of the inhabitants and residents of, and the economy of, the Issuer. Accordingly, to the extent permitted by the laws of the State and the rules and regulations of the Public Service Commission of West Virginia, every owner, tenant or occupant of any real property located near the stormwater portion of the System, and where stormwater from real property affects or drains into the stormwater portion of the System, shall be deemed to be a user served by the stormwater portion of the System and it is declared that the mandatory use of the stormwater portion of the System by such real property owner is necessary and essential for the health and welfare of the inhabitants and residents of the Issuer and the State. To the extent permitted by the laws of the State and the rules and regulations of the Public Service Commission of West Virginia, every such owner, tenant or occupant shall, after a 30-day notice of the availability of the stormwater portion of the System, pay the rates and charges established therefor.

Section 7.17. Completion of Project; Permits and Orders. The Board shall complete the Project as promptly as possible and operate and maintain the System as a revenue-producing utility in good condition and in compliance with all federal and state requirements and standards.

The Board has obtained all permits required by state and federal laws for the acquisition and construction of the Project, all orders and approvals from the Council and the DEP necessary for the acquisition and construction of the Project and the operation of the System and all approvals for issuance of the Series 2014 A Bonds required by state law, with all requisite appeal periods having expired without successful appeal and the Issuer shall supple an opinion of counsel to such effect.

Section 7.18. Compliance with Bond Purchase Agreement and Law. The Issuer and the Board shall perform, satisfy and comply with all the terms and conditions of the Bond Purchase Agreement and the Act. Notwithstanding anything herein to the contrary, the Issuer and the Board shall provide the DEP with copies of all documents submitted to the Authority.

The Issuer and the Board shall also comply with all applicable laws, rules and regulations issued by the Authority and the DEP or other state, federal or local bodies in regard to the acquisition and construction of the Project and the operation, maintenance and use of the System.

The Issuer shall perform an annual maintenance audit which maintenance audit

shall be submitted to the Authority and the Public Service Commission of West Virginia in the manner prescribed by and the guidelines established by the Authority and the Public Service Commission of West Virginia.

Section 7.19. RESERVED.

Section 7.20. Securities Laws Compliance. The Issuer shall provide the Authority, in a timely manner, with any and all information that may be requested of it (including its annual audit report, financial statements, related information and notices of changes in usage and customer base) so that the Authority may comply with the provisions of SEC Rule 15c2-12 (17 CFR Part 240).

Section 7.21. Contracts; Change Orders; Public Releases. A. The Issuer shall, simultaneously with the delivery of the Series 2014 A Bonds or immediately thereafter, enter into written contracts for the immediate acquisition or construction of the Project.

B. The Issuer shall submit all proposed change orders to the DEP for written approval. The Issuer shall obtain the written approval of the DEP before expending any proceeds of the Series 2014 A Bonds held in "contingency" as set forth in the schedule attached to the Certificate of the Consulting Engineer. The Issuer shall also obtain the written approval of the DEP before expending any proceeds of the Series 2014 A Bonds made available due to bid or construction or project underruns.

C. The Issuer shall list the funding as being provided by the Authority and the DEP in any press release, publication, program bulletin, sign or other public communication that references the Project, including but not limited to any program document distributed in conjunction with any ground breaking or dedication of the Project.

Section 7.22. Statutory Mortgage Lien. For the further protection of the Holders of the Series 2014 A Bonds, a statutory mortgage lien upon the System is granted and created by the Act, which statutory mortgage lien is hereby recognized and declared to be valid and binding, shall take effect immediately upon delivery of the Series 2014 A Bonds, and shall be on a parity with the statutory mortgage lien in favor of the Holders of the Prior Bonds.

ARTICLE VIII

INVESTMENT OF FUNDS

Section 8.01. Investments. Any monies held as a part of the funds and accounts created by this Bond Legislation, other than the Revenue Fund, shall be invested and reinvested by the Commission, the Depository Bank, or such other bank or national banking association holding such fund or account, as the case may be, at the written direction of the Issuer in any Qualified Investments to the fullest extent possible under applicable laws, this Bond Legislation, the need for such monies for the purposes set forth herein and the specific restrictions and provisions set forth in this Section 8.01.

Any investment shall be held in and at all times deemed a part of the fund or account in which such monies were originally held, and the interest accruing thereon and any profit or loss realized from such investment shall be credited or charged to the appropriate fund

or account. The investments held for any fund or account shall be valued at the lower of cost or then current market value, or at the redemption price thereof if then redeemable at the option of the holder, including the value of accrued interest and giving effect to the amortization of discount, or at par if such investment is held in the "Consolidated Fund." The Commission, the Depository Bank, or such other bank or national banking association, as the case may be, shall sell and reduce to cash a sufficient amount of such investments whenever the cash balance in any fund or account is insufficient to make the payments required from such fund or account, regardless of the loss on such liquidation. The Depository Bank or such other bank or national banking association, as the case may be, may make any and all investments permitted by this section through its own investment or trust department and shall not be responsible for any losses from such investments, other than for its own negligence or willful misconduct.

The Depository Bank shall keep complete and accurate records of all funds, accounts and investments, and shall distribute to the Issuer, at least once each year, or more often as reasonably requested by the Issuer, a summary of such funds, accounts and investment earnings. The Issuer shall retain all such records and any additional records with respect to such funds, accounts and investment earnings so long as any of the Series 2014 A Bonds are Outstanding and as long thereafter as necessary to assure the exclusion of interest, if any, on the Series 2014 A Bonds from gross income for federal income tax purposes.

Section 8.02. Covenants as to Use of Proceeds. The Issuer covenants (i) to comply with the Code and all Regulations from time to time in effect and applicable to the Series 2014 A Bonds as may be necessary in order to maintain the status of the Series 2014 A Bonds as governmental bonds; (ii) that it shall not take, or permit or suffer to be taken, any action with respect to the Issuer's use of the proceeds of the Series 2014 A Bonds which would cause any bonds, the interest on which is exempt from federal income taxation under Section 103(a) of the Code, issued by the Authority or the Council, as the case may be, from which the proceeds of the Series 2014 A Bonds are derived, to lose their status as tax-exempt bonds; and (iii) to take such action, or refrain from taking such action, as shall be deemed necessary by the Issuer, or requested by the Authority or the Council, to ensure compliance with the covenants and agreements set forth in this Section, regardless of whether such actions may be contrary to any of the provisions of this Ordinance.

The Issuer shall annually furnish to the Authority, information with respect to the Issuer's use of the proceeds of the Series 2014 A Bonds and any additional information requested by the Authority.

ARTICLE IX

DEFAULT AND REMEDIES

Section 9.01. Events of Default. Each of the following events shall constitute an "Event of Default" with respect to the Series 2014 A Bonds:

(1) If default occurs in the due and punctual payment of the principal of or interest, if any, on any Series 2014 A Bonds; or

(2) If default occurs in the Issuer's observance of any of the covenants, agreements or conditions on its part relating to the Series 2014 A Bonds set forth in this Bond Legislation, any supplemental resolution or in the Series 2014 A Bonds, and such default shall

have continued for a period of 30 days after the Issuer shall have been given written notice of such default by the Commission, the Depository Bank, the Registrar, the Paying Agent or any other Paying Agent or a Holder of a Bond; or

(3) If the Issuer or Board files a petition seeking reorganization or arrangement under the federal bankruptcy laws or any other applicable law of the United States of America; or

(4) If default occurs with respect to the Prior Bonds or the Prior Ordinances.

Section 9.02. Remedies. Upon the happening and continuance of any Event of Default, any Registered Owner of a Bond may exercise any available remedy and bring any appropriate action, suit or proceeding to enforce his or her rights and, in particular, (i) bring suit for any unpaid principal or interest then due, (ii) by mandamus or other appropriate proceeding enforce all rights of such Registered Owners including the right to require the Issuer to perform its duties under the Act and the Bond Legislation relating thereto, including but not limited to the making and collection of sufficient rates or charges for services rendered by the System, (iii) bring suit upon the Bonds; (iv) by action at law or bill in equity require the Issuer to account as if it were the trustee of an express trust for the Registered Owners of the Bonds, and (v) by action or bill in equity enjoin any acts in violation of the Bond Legislation with respect to the Bonds, or the rights of such Registered Owners; provided however, that all rights and remedies of the Holders of the Series 2014 A Bonds shall be on a parity with those of the Holders of the Prior Bonds.

Section 9.03. Appointment of Receiver. Any Registered Owner of a Bond may, by proper legal action, compel the performance of the duties of the Issuer under the Bond Legislation and the Act, including, the completion of the Project and after commencement of operation of the System, the making and collection of sufficient rates and charges for services rendered by the System and segregation of the revenues therefrom and the application thereof. If there be any Event of Default with respect to such Bonds, any Registered Owner of a Bond shall, in addition to all other remedies or rights, have the right by appropriate legal proceedings to obtain the appointment of a receiver to administer the System or to complete the acquisition and construction of the Project on behalf of the Issuer, with power to charge rates, rentals, fees and other charges sufficient to provide for the payment of Operating Expenses of the System, the payment of the Bonds and interest and the deposits into the funds and accounts hereby established, and to apply such rates, rentals, fees, charges or other revenues in conformity with the provisions of this Bond Legislation and the Act.

The receiver so appointed shall forthwith, directly or by his or her or its agents and attorneys, enter into and upon and take possession of all facilities of said System and shall hold, operate and maintain, manage and control such facilities, and each and every part thereof, and in the name of the Issuer exercise all the rights and powers of the Issuer with respect to said facilities as the Issuer itself might do.

Whenever all that is due upon the Bonds and interest thereon and under any covenants of this Bond Legislation for reserve, sinking or other funds and upon any other obligations and interest thereon having a charge, lien or encumbrance upon the revenues of the System shall have been paid and made good, and all defaults under the provisions of this Bond Legislation shall have been cured and made good, possession of the System shall be surrendered to the Issuer upon the entry of an order of the court to that effect. Upon any subsequent default,

any Registered Owner of any Bonds shall have the same right to secure the further appointment of a receiver upon any such subsequent default.

Such receiver, in the performance of the powers hereinabove conferred upon him or her or it, shall be under the direction and supervision of the court making such appointment, shall at all times be subject to the orders and decrees of such court and may be removed thereby, and a successor receiver may be appointed in the discretion of such court. Nothing herein contained shall limit or restrict the jurisdiction of such court to enter such other and further orders and decrees as such court may deem necessary or appropriate for the exercise by the receiver of any function not specifically set forth herein.

Any receiver appointed as provided herein shall hold and operate the System in the name of the Issuer and for the joint protection and benefit of the Issuer and Registered Owners of the Bonds. Such receiver shall have no power to sell, assign, mortgage or otherwise dispose of any assets of any kind or character belonging or pertaining to the System, but the authority of such receiver shall be limited to the completion of the Project and the possession, operation and maintenance of the System for the sole purpose of the protection of both the Issuer and Registered Owners of such Bonds and the curing and making good of any Event of Default with respect thereto under the provisions of this Bond Legislation, and the title to and ownership of said System shall remain in the Issuer, and no court shall have any jurisdiction to enter any order or decree permitting or requiring such receiver to sell, assign, mortgage or otherwise dispose of any assets of the System.

ARTICLE X

PAYMENT OF BONDS

Section 10.01. Payment of Bonds. If the Issuer shall pay or there shall otherwise be paid to the Holders of the Series 2014 A Bonds, the principal of and interest, if any, due or to become due thereon, at the times and in the manner stipulated therein and in this Bond Legislation, then the pledge of Gross Revenues and other moneys and securities pledged under this Bond Legislation and all covenants, agreements and other obligations of the Issuer to the Registered Owners of the Series 2014 A Bonds shall thereupon cease, terminate and become void and be discharged and satisfied, except as may otherwise be necessary to assure the exclusion of interest, if any, on the Series 2014 A Bonds from gross income for federal income tax purposes.

ARTICLE XI

MISCELLANEOUS

Section 11.01. Amendment or Modification of Bond Legislation. Prior to the issuance of the Series 2014 A Bonds, this Ordinance may be amended or supplemented in any way by the Supplemental Resolution. Following issuance of the Series 2014 A Bonds, no material modification or amendment of this Ordinance, or of any ordinance, resolution or order amendatory or supplemental hereto, that would materially and adversely affect the rights of Registered Owners of the Series 2014 A Bonds shall be made without the consent in writing of the Registered Owners of the Series Series 2014 A Bonds so affected and then Outstanding; provided, that no change shall be made in the maturity of any Bond or Bonds or the rate of

interest thereon, or in the principal amount thereof, or affecting the unconditional promise of the Issuer to pay such principal and interest out of the funds herein pledged therefor without the consent of the Registered Owner thereof. No amendment or modification shall be made that would reduce the percentage of the principal amount of the Series 2014 A Bonds required for consent to the above-permitted amendments or modifications. Notwithstanding the foregoing, this Bond Legislation may be amended without the consent of any Bondholder as may be necessary to assure compliance with Section 148(f) of the Code relating to rebate requirements or otherwise as may be necessary to assure the excludability of interest on the Series 2014 A Bonds from gross income of the holders thereof.

Section 11.02. Bond Legislation Constitutes Contract. The provisions of the Bond Legislation shall constitute a contract between the Issuer and the Registered Owners of the Bonds, and no change, variation or alteration of any kind of the provisions of the Bond Legislation shall be made in any manner, except as in this Bond Legislation provided.

Section 11.03. Severability of Invalid Provisions. If any section, paragraph, clause or provision of this Ordinance should be held invalid by any court of competent jurisdiction, the invalidity of such section, paragraph, clause or provision shall not affect any of the remaining provisions of this Ordinance, the Supplemental Resolution or the Series 2014 A Bonds.

Section 11.04. Headings, Etc. The headings and catchlines of the articles, sections and subsections hereof are for convenience of reference only, and shall not affect in any way the meaning or interpretation of any provision hereof.

Section 11.05. Conflicting Provisions Repealed; Prior Ordinances. All ordinances, orders or resolutions and or parts thereof in conflict with the provisions of this Ordinance are, to the extent of such conflict, hereby repealed; provided, that in the event of any conflict between this Ordinance and the Prior Ordinances, the Prior Ordinances shall control (unless less restrictive), so long as the Prior Bonds are outstanding.

Section 11.06. Covenant of Due Procedure, Etc. The Issuer covenants that all acts, conditions, things and procedures required to exist, to happen, to be performed or to be taken precedent to and in the adoption of this Ordinance do exist, have happened, have been performed and have been taken in regular and due time, form and manner as required by and in full compliance with the laws and Constitution of the State of West Virginia applicable thereto; and that the Mayor, the City Manager, the City Clerk and members of the Governing Body and the Board were at all times when any actions in connection with this Ordinance occurred and are duly in office and duly qualified for such office.

Section 11.07. Appointment. The Issuer does hereby appoint, designate and approve the hiring of Steptoe & Johnson PLLC, Morgantown, West Virginia, as bond counsel to the Issuer and the Board in connection with the issuance by the Issuer of the Series 2014 A Bonds.

Section 11.08. Statutory Notice and Public Hearing. Upon adoption hereof, an abstract of this Ordinance determined by the Governing Body to contain sufficient information as to give notice of the contents hereof shall be published once a week for 2 successive weeks within a period of fourteen consecutive days, with at least 6 full days intervening between each publication, in the *Dominion Post*, a newspaper published and of general circulation in The City of Morgantown, together with a notice stating that this Ordinance

has been adopted and that the Issuer contemplates the issuance of the Series 2014 A Bonds, and that any person interested may appear before the Governing Body upon a date certain, not less than ten days subsequent to the date of the first publication of such abstract of this Ordinance and notice, and present protests, and that a certified copy of this Ordinance is on file with the Governing Body for review by interested persons during office hours of the Governing Body. At such hearing, all objections and suggestions shall be heard and the Governing Body shall take such action as it shall deem proper in the premises.

[Remainder of Page Intentionally Blank]]

Section 11.09. Effective Date. This Ordinance shall take effect immediately following public hearing and final reading hereof.

Passed on First Reading:

Passed on Second Reading:

Passed on Final Reading
Following Public Hearing:

By: _____
Mayor

ATTEST:

By: _____
City Clerk

627490.00052

CERTIFICATION

Certified a true copy of an Ordinance duly enacted by the Council of THE CITY OF MORGANTOWN on the _____ day of _____, 2014.

Dated: _____, 2014.

[SEAL]

_____
City Clerk

THE CITY OF MORGANTOWN
COMBINED UTILITY SYSTEM REVENUE BONDS, SERIES 2014 A
(WEST VIRGINIA SRF PROGRAM)

ARTICLE I
STATUTORY AUTHORITY, FINDINGS AND DEFINITIONS

Section 1.01. Authority for this Ordinance.
Section 1.02. Findings.
Section 1.03. Bond Legislation Constitutes Contract.
Section 1.04. Definitions.

ARTICLE II
AUTHORIZATION OF ACQUISITION AND CONSTRUCTION OF THE PROJECT

Section 2.01. Authorization of Acquisition and Construction of the Project.

ARTICLE III
AUTHORIZATION, TERMS, EXECUTION, REGISTRATION AND SALE OF BONDS; AUTHORIZATION AND EXECUTION OF BOND PURCHASE AGREEMENT

Section 3.01. Authorization of Bonds.
Section 3.02. Terms of Bonds.
Section 3.03. Execution of Bonds.
Section 3.04. Authentication and Registration.
Section 3.05. Negotiability, Transfer and Registration
Section 3.06. Bonds Mutilated, Destroyed, Stolen or Lost.
Section 3.07. Bonds not to be Indebtedness of the Issuer.
Section 3.08. Bonds Secured by Pledge of Gross Revenues; Lien Position with respect to Prior Bonds.
Section 3.09. Delivery of Bonds.
Section 3.10. Form of Bonds.
Section 3.11. Sale of Bonds; Approval and Ratification of Execution of Bond Purchase Agreement.
Section 3.12. Filing of Amended Schedule.

ARTICLE IV

[RESERVED]

ARTICLE V
FUNDS AND ACCOUNTS; SYSTEM REVENUES AND APPLICATION THEREOF

Section 5.01. Establishment of Funds and Accounts with Depository Bank.
Section 5.02. Establishment of Funds and Accounts with Commission.
Section 5.03. System Revenues; Flow of Funds.
Section 5.04. Reserve Account Letter of Credit or Surety Bond.

ARTICLE VI
BOND PROCEEDS; CONSTRUCTION DISBURSEMENTS

Section 6.01. Application of Bond Proceeds; Pledge of Unexpended Bond Proceeds
Section 6.02. Disbursements From the Series 2014 A Bond Construction Trust Fund.

ARTICLE VII
ADDITIONAL COVENANTS OF THE ISSUER

Section 7.01. General Covenants of the Issuer.
Section 7.02. Bonds not to be Indebtedness of the Issuer.
Section 7.03. Bonds Secured by Pledge of Gross Revenues; Lien Position with respect to Prior Bonds.
Section 7.04. Rates and Charges.
Section 7.05. Sale of the System.
Section 7.06. Issuance of Other Obligations Payable Out of Revenues and General Covenant Against Encumbrances.
Section 7.07. Parity Bonds.
Section 7.08. Books; Records and Audit.
Section 7.09. Rates.
Section 7.10. Operating Budget and Monthly Financial Report.
Section 7.11. Engineering Services and Operating Personnel.
Section 7.12. No Competing Franchise.
Section 7.13. Enforcement of Collections.
Section 7.14. No Free Services.
Section 7.15. Insurance and Construction Bonds.
Section 7.16. Mandatory Use.
Section 7.17. Completion of Project; Permits and Orders.
Section 7.18. Compliance with Bond Purchase Agreement and Law.
Section 7.19. RESERVED.
Section 7.20. Securities Laws Compliance.
Section 7.21. Contracts; Change Orders; Public Releases.
Section 7.22. Statutory Mortgage Lien.

ARTICLE VIII
INVESTMENT OF FUNDS

Section 8.01. Investments.
Section 8.02. Covenants as to Use of Proceeds

ARTICLE IX
DEFAULT AND REMEDIES

Section 9.01. Events of Default.
Section 9.02. Remedies
Section 9.03. Appointment of Receiver.

ARTICLE X
PAYMENT OF BONDS

Section 10.01. Payment of Bonds.

ARTICLE XI
MISCELLANEOUS

Section 11.01. Amendment or Modification of Bond Legislation.
Section 11.02. Bond Legislation Constitutes Contract.
Section 11.03. Severability of Invalid Provisions.
Section 11.04. Headings, Etc.
Section 11.05. Conflicting Provisions Repealed; Prior Ordinances.
Section 11.06. Covenant of Due Procedure, Etc.
Section 11.07. Appointment.
Section 11.08. Statutory Notice and Public Hearing.
Section 11.09. Effective Date.
SIGNATURES
CERTIFICATION

AN ORDINANCE BY THE CITY OF MORGANTOWN AUTHORIZING IT, AS LESSOR, TO LEASE SPACE AT THE FORMER WOODBURN SCHOOL, NOW OWNED BY THE CITY, TO THE WEST VIRGINIA UNIVERSITY BOARD OF GOVERNORS, LESSEE, FOR USE BY THE WVU COLLEGE OF CREATIVE ARTS, SCHOOL OF ART DESIGN, CERAMICS DEPARTMENT.

The City of Morgantown hereby ordains that its City Manager is authorized to execute the attached lease agreement by and on behalf of the City of Morgantown.

FIRST READING

_____
MAYOR

ADOPTED:

FILED:

_____
CITY CLERK

RECORDED:

CONTRACT OF LEASE

THIS CONTRACT OF LEASE ("Lease"), made 6th of November, 2013, by and between City of Morgantown, a municipal corporation, hereinafter referred to as "Lessor," and the West Virginia University Board of Governors on behalf of West Virginia University ("WVU"), a state agency, hereinafter also referred to as "Lessee."

WHEREAS, WVU has sole authority to select and to acquire by contract or lease all grounds, buildings, office space or other space, the rental of which is required necessarily by the institution;

WHEREAS, the space herein leased is necessary for the proper function of the WVU College of Creative Arts, School of Art Design, Ceramics Department, Production Pottery, hereinafter referred to as "Tenant;"

NOW THEREFORE, in consideration of the full and complete performance of the covenants, terms, and provisions contained herein, The Lessor and Lessee agree to the following:

1. BASIC LEASE PROVISIONS

The Basic Lease Provisions have been presented as follows for the purpose of restating certain terms of the Lease in a summary format. Their being so presented is not in derogation of the importance of any other provisions of this Lease, and shall not imply that such Basic Lease Provisions are to be construed in any other manner than in the context of all of the other terms and conditions of this Lease, taken as a whole.

a. Premises: Address: 918 Forney Street, Morgantown, WV
Size: 7,665 square feet
Defined Area: Former elementary school second floor, and the entire modular and multi-purpose facilities.

b. Rent: Annual Cost per Square Foot: $3.13
Cost per Month: $2,000
Cost per Year: $24,000
Rent is discounted to $1,500 per month for the first two months.

c. Initial Term of Lease: Beginning on December 1, 2013, and ending on June 30, 2015.

d. Renewal Option: Automatic Annual Renewals for the months of July through June unless canceled by either party, with provision of four months' notice prior to June 30th. Rent for each annual renewal period to be adjusted by CPI.

e. Right of First Refusal for Additional Space: NONE

f. Tenant: WVU College of Creative Arts, Division of Art; Alison Helm, Tenant Representative.

g. Cooperative Service: The Tenant pledges to work with the Lessor in arranging and conducting community programs relative to the Tenant's field of study; the Tenant shall work cooperatively to ensure such offerings are at minimal cost to the participant as community service.

2. PREMISES; COMMON AREAS

The Lessor hereby leases to the Lessee, and Lessee hereby leases from Lessor for use by the Tenant, the leased premises described in Sections 1a above and as further described as follows ("Premises"):

Portions of a 9,108 square foot former elementary school, being the second floor containing approximately 3,579 square feet (building 1), the entire modular facility of approximately 1,939 square feet (building 2), and the entire multi-purpose facility of approximately 2,147 square feet (building 3), for a total of 7,665 rented square feet, located at 918 Forney Street, Morgantown, Monongalia County, West Virginia, as illustrated in Exhibit A.

In addition, the Tenant, its employees, representatives, agents, customers, guests and invitees shall have the right to use all driveways, parking areas, sidewalks, lobbies, elevators, hallways, restrooms, and other common facilities and areas (collectively, "Common Areas"), if any, in or about the building containing said Premises, jointly with other tenants and their respective representatives, agents, customers, guests and invitees. The Lessor will maintain the Common Areas in a clean, safe and sanitary condition and provide all necessary janitorial service, snow removal, maintenance and repair, and utilities to all Common Areas.

3. TERM

The initial term of this Lease, subject to the provisions hereof, shall begin on December 1, 2013 ("Start Date") and end at midnight on June 30, 2015. PROVIDED HOWEVER, this Lease may be canceled by the Lessee as hereinafter provided in Sections 8, 10 and 21, before the end of the term. This Lease shall be considered renewed for each succeeding state fiscal year during the Term of the Lease unless this Lease is canceled by the Lessee before the end of the then current fiscal year pursuant to Section 21 hereunder.

4. RENT

The Lessee covenants that the Tenant it shall pay rent unto the Lessor, as rent for the Premises herein leased and all Common Areas, the sum of One Thousand Five Hundred Dollars ($1,500) per month, for the months of December 2013 and January

2014, then Two Thousand Dollars ($2,000) per month thereafter, payable in arrears pursuant to provisions of W.Va. Code §12-3-10, upon receipt of invoice from the Lessor to the Tenant. Invoices shall be prepared by the Lessor and provided to the Tenant for payment processing. Lessor shall also be provided reimbursement for a prorated share of certain expenses as further described in Section 8 a ("Additional Rent").

5. FIRST RIGHT OF REFUSAL FOR ADDITIONAL SPACE – NONE

6. RENEWAL OPTION

After the initial Term, the Lease will automatically renew from year to year, for the months of July through June; provided, however, that either party may, at its option, cancel an upcoming renewal period by giving written notice unto the other 120 days prior to any June 30th of their desire for the expiration. Rent for subsequent renewal years shall increase by percentage of difference in the Consumer Price Index, as published by the Bureau of Labor Statistics of the U.S. Department of Labor, based on US City Average, All Items, with comparison of the term start date to the month of April of the expiring year. The new rental rate shall be officiated by correspondence and, unless there other changes to the Lease, shall not require an addendum to officiate.

7. MANAGEMENT OF LEASE

The Lessor and the Tenant's Representative are encouraged to discuss matters relative to the occupancy, finance, repair, and maintenance of the Premises directly; however, the Lessee should be contacted if changes are needed to the Lease, renewal, termination or financial issues or if either party is unresponsive to the other.

8. UTILITIES AND OTHER RELATED SERVICES

a. The Lessor shall furnish and timely pay when due and payable, at no additional cost to the Lessee or Tenant, the following utilities and/or services:

(i) Utilities for building 1, which are not separately metered, to be paid by the Lessor, who shall seek a fifty percent (50%) reimbursement as Additional Rent from the Tenant by separate invoice, providing evidence of payment made.

(ii) Custodial services in the common areas used by other tenants.

(iii) Ground maintenance, including mowing, landscaping, and parking lot maintenance.

(iv) Snow removal, to be paid by the Lessor, who shall seek a fifty percent (50%) reimbursement as Additional Rent from the Tenant by separate invoice, providing evidence of payment made.

b. The Tenant, at its expense, shall furnish and provide payment to the applicable company or vendor for the following utilities and/or services:

(i) The separately metered utilities of buildings 2 and 3 shall be placed in the name of the Tenant and directly paid.

(ii) Custodial Services in the Premises.

(iii) Trash services, for which the Tenant may choose to partner with the neighboring tenants.

(iv) Telephone and internet connectivity services.

(ii) The Tenant shall have the right to rekey, install a key card access system, or any other security system for the Premises, using such security services provider as the Lessee and Tenant may choose in its sole discretion. The Lessee and Tenant, at its sole discretion, can elect to remove said system at any time, provided that the Lessee and Tenant, at its sole expense, shall repair any damage resulting from such removal.

c. Interruption. In the event that any utilities or services being provided by the Lessor are interrupted for reasons within the Lessor's control and as a result, suitability of the Premises is interrupted, the Lessee shall have the option to (i) cause the utilities or services to be reinstated and deduct the costs and expense thereof from the rents which may become due and payable thereafter to the Lessor until the Lessee is fully reimbursed for such expenditures; or (ii) immediately terminate this Lease.

9. MAINTENANCE

The Lessor binds itself to maintain the Premises, including the structure of the Premises, both interior and exterior; the electrical, HVAC and plumbing fixtures and equipment; and the interior and exterior painting and flooring in a good and tenantable condition equal to that of the Premises as at the time possession thereof is delivered to the Lessee and Tenant; included in the aforementioned obligation is the duty to replace HVAC filters and light bulbs on a regular schedule or upon request by the Tenant.

If the Lessor fails to maintain the interior and exterior structure of the Premises, and the electrical, HVAC and plumbing fixtures and equipment owned by the Lessor in a good and tenantable condition of repair, the Lessee shall request the Lessor, in writing, to correct any deficiency which may have occurred since possession of the Premises by the Tenant, provided, however, such deficiency was not caused by the neglect or acts of the Lessee or Tenant. Upon refusal or neglect of the Lessor to comply with the Lessee's request for the repair or reinstatement of previously-existing conditions, the

Lessee may, ten (10) days after receipt of such request by the Lessor, cause the repairs to be made and deduct the costs and expense thereof from the rents which may become due and payable thereafter to the Lessor until the Lessee is fully reimbursed for such expenditures. Provided however, any such repairs related to life and safety issues, including without limitation, broken windows, hot water heater, smoke detectors, carbon monoxide detectors shall be repaired immediately, or the Lessee may (i) cause the repairs to be made and deduct the costs and expense thereof from the rents which may become due and payable thereafter to the Lessor until the Lessee or Tenant is fully reimbursed for such expenditures; or (ii) immediately terminate this Lease.

Notwithstanding the foregoing, the Lessor is not responsible for maintenance of such fixtures and equipment as may be owned by the Lessee or Tenant.

10. DAMAGE TO PREMISES BY FIRE, ETC.

It is agreed by and between the parties hereto that in the event the Premises are destroyed or damaged by fire, natural elements, or other cause to such an extent that continued occupancy by the Tenant would be impractical, the Lessee shall give immediate notice thereof to the Lessor, in writing, and this lease shall terminate. If only a part of the Premises shall be rendered untenable, leaving the remainder suitable for occupancy, the rental shall be proportionately abated until the Premises have been repaired. The Lessor shall have five (5) days from receipt of such notice to decide whether or not to repair the Premises. Any repairs undertaken must be completed within a reasonable length of time after the Lessor's decision. Should the Lessor decide not to repair the Premises, this Lease shall terminate, and the Lessee and Tenant shall deliver possession of the Premises to the Lessor and thereupon be relieved of any and all liability hereunder or concerning the Premises except for any unpaid rent through the final day of occupancy.

11. INSURANCE

The Lessor agrees to maintain commercial general liability insurance with coverage amounts of at least One Million Dollars ($1,000,000) combined single limits per occurrence throughout the term of the lease for liability resulting from injury or death, and from damage to property, occurring in or about the Premises, building and Common Areas. In addition, the Lessor shall keep the Premises, building and Common Areas insured against fire, windstorm, and other casualty, under an all risk policy of insurance, written in standard form, in the full replacement value thereof. The Lessor agrees to supply and deliver, upon request of the Lessee, a Certificate of Insurance evidencing the required liability insurance coverage.

The Lessee and Tenant are insured through the West Virginia Board of Risk and Insurance Management (BRIM) in the amount of One Million Dollars ($1,000,000) combined single limits per occurrence. The Lessee agrees to supply and deliver, upon request to the Lessor, a Certificate of Insurance evidencing the required liability insurance coverage.

12. SUITABILITY OF PREMISES

The Lessor warrants the Premises to be suitable for use as a WVU facility and for the conduct of Tenant's business, and that there shall be no liability on the part of the State of West Virginia, WVU, its officers, agents or employees for any loss or damage to the Premises, nor any liability on any individual by virtue of any of the provisions of this Lease, whether caused by overloading the floors with equipment or otherwise installing fixtures and equipment commonly used in an office facility. Further, the Lessor warrants that the Premise compliant according to all local, state, and federal code requirements and all zoning ordinances.

a. Fire and Health Hazards. The Lessor will remove and correct any fire or health hazards not caused by the neglect or acts of the Tenant, its agents, employees or servants which any authorized public authority may order corrected or removed during the term of this lease. Upon refusal or neglect of the Lessor to comply with any such order, the Tenant may comply therewith and deduct the costs from monthly rentals payable thereafter to the Lessor until the Tenant is fully reimbursed therefore.

b. Environmental. The Lessor represents and warrants to the Lessee and Tenant that there are no hazardous or unsafe substances in, on or under the Premises, building or Common Areas or the underlying real property, and agrees to indemnify, defend and hold harmless the Lessee and Tenant, its affiliates, and their respective officers, agents and employees, against any and all claims, damages, costs, liabilities and expenses, including attorneys' fees, resulting from a breach of the Lessor's representations and warranties or from the presence of any hazardous or unsafe substances in, on or under the Premises, building, Common Areas or the underlying real property, as of the Start Date.

13. PREPARATION OF PREMISES

a. Lessor's Work. Prior to the Start Date, the Lessor, at its sole cost, shall cause the improvements stated below to be performed in full ("Lessor's Work"). The preparation of the Premises shall be considered substantially complete only upon the acceptance of the Premises in writing by the Lessee, in the Lessee's sole discretion. In the event that the Lessor's Work is not substantially complete as set forth in this Section within five (5) of the Start Date, the accrual of rents shall likewise be delayed by one day for each day of delay of completion after the Start Date. In addition, if the Lessor fails to complete the Lessor's Work thirty (30) days after the

Start Date, the Lessee shall be entitled to immediately terminate this Lease upon written notice to the Lessor, if so desired.

Lessor's Work to be completed pursuant to this Section, if any:

(i) Ensure all previous users furniture, trash, and debris is removed and the facility is turned over in broom clean condition.

(ii) Lessor to provide labeled keys to all exterior and interior doors.

b. Tenant's Work. The Tenant, at its sole cost, shall have the right to complete the tenant improvements which are expressly identified. Such shall be considered the Tenant's responsibility ("Tenant's Work"). The Lessor hereby consents to the Tenant performing the following Tenant's Work.

(i) Outside of building 3, the Tenant shall remove existing side door roof and extend the current concrete pad to the entire length of the facility, to create an exterior, fenced gas and electric kiln area. Work shall include utility enhancement and/or connectivity, creation of a pad, fencing, and roofing, in code compliant order, at Tenant's expense.

(ii) Outside and/or inside all Premises, the Tenant shall be permitted to install fixed and moveable equipment to ceilings, walls, and floors, which may include kilns, spray booth, retractable ceiling mounts, Jigger Jolly machines, RAM press, pugmill, clay mixer, tract lights, gas regulator, and slop sink, and other items necessary for Tenant's use.

(iii) Installation of voice/data for phone, fax, computer, and other such information technology uses. Permission includes all wire, additional outlets, closet racks, and connectivity.

(iv) Installation of mounted materials such as pictures, bulletin boards, white boards, chalk boards, interior signage, or any other audio/visual or materials, electronic or otherwise.

(v) Tenant shall provide design and desired location for any exterior signage and present to Lessor for permission to create and place at Tenant's expense; such approval shall not be unreasonably withheld.

c. Future Alterations. In the event structural or other changes to the Premises are desired during the term, the Lessee shall first deem the request compliant with W. Va. Code §18B-19-12 (f), being necessary for the proper, efficient, and economically sound operation of the Tenant's program, and will consult with the Lessor for permission and decision of work performance by the Lessors resources or for permission to have the

work performed by the Lessee or Tenant's resources. If the alteration is to be completed by the Lessor at his cost and expense, the Lessee and/or Tenant shall reimburse the Lessor in lump sum or reappraise and renegotiate the Lease to amortize such expenses.

14. NEGLECT OF PREMISES

The Lessee covenants that it shall not commit waste on the Premises herein leased, and the Premises will be returned to the Lessor at the termination of this Lease in substantially as good condition as at the commencement thereof, damages from reasonable wear and tear, natural elements, normal depreciation and decay excepted.

15. TRANSFER OR ASSIGNMENT OF LEASE

The Lessee shall have the right to assign, reassign, or transfer this Lease contingent upon the prior written approval of the Lessor.

16. SUBORDINATION AND NONDISTURBANCE

a. Subordination and Nondisturbance. The Lessor shall have the right to place upon the building and underlying real property any mortgages which the Lessor or its lender(s) deem advisable. Such mortgages shall have priority over this Lease and the Lessee's and Tenant's rights hereunder. At the Lessor's request, the Lessee shall execute any and all instruments, the form of which must conform to the State of West Virginia's Constitution and laws, necessary to subordinate this Lease to any such mortgages, provided that each such mortgagee executes a non-disturbance agreement which provides that so long as the Lessee or Tenant is not in default of this Lease, Lessee's and Tenant's right to possession of the Premises and other rights under this Lease, including, without limitation, any options to renew, rights of first refusal, and right to terminate, shall not be affected or disturbed by the mortgagee in the exercise of any of its rights or remedies against the Lessor, nor shall the Lessee or Tenant be named as a party defendant to any foreclosure of the lien or mortgage. Furthermore, the Lessee shall, within thirty (30) days after receipt of a request therefore, execute and deliver to the Lessor an estoppel certificate setting forth the name of both the Lessee and Tenant, the date of this Lease, a description of the Premises and the Rent payable therefore, certifying that this Lease is in full force and effect, and certifying that the Lessor is not in default of this Lease or specifically enumerating any outstanding events of default by the Lessor.

b. Attornment. In the event that the Lessor's mortgagee or any other person acquires title to the Premises pursuant to the exercise of any remedy provided for in its mortgage, the Lessee agrees to attorn to such transferee as its new Lessor via an agreement in conformance with the

State of West Virginia's Constitution and laws, and this Lease shall continue in full force and effect as a direct lease between the Lessee and such transferee, upon all of the terms and conditions contained herein.

17. DEFAULT

In the event any party defaults in any of the covenants contained herein, the requesting party shall notify the other, in writing, of such default and if such default is not corrected within fifteen (15) days after receipt of notification, unless a shorter correction period is required elsewhere in this Lease, the requesting party may notify the other party that the Lease is terminated, without further obligation, and reenter/vacate the Premises herein leased.

18. TAXES AND ASSESSMENTS

The Lessor will pay taxes and assessments levied on the Premises during the term of this lease.

19. TOBACCO FREE FACILITY

The Lessor agrees to assist the Lessee and Tenant in maintaining the Premises as a tobacco free environment in accordance with the policy of the Lessee. WVU has implemented a tobacco free policy to provide a smoke-free and tobacco-free environment for the University community. Smoking or use of any tobacco or other similar products is prohibited in all buildings, facilities, and lands of WVU and applies to all locations including each branch campus, each off-campus location, and to the leased Premises under the tenancy of WVU. The Premises shall be tobacco free, but if the entire facility containing the Premises is not capable of same, the Lessor agrees to assist the Lessee and Tenant in minimally designating one tobacco free entrance/exit, if at all possible.

20. PARKING

The Lessor agrees to provide, at no additional cost to the Lessee, free employee and visitor parking spaces immediately adjacent to the Premises.

21. PROVISIONS FOR IMMEDIATE TERMINATION

In addition to the other events set forth herein which permit the immediate termination of this Lease, pursuant to provisions of W.Va. Code §18B-19-12 (e) (1), the Lessee shall have the right to cancel this lease, without further obligation on the part of the Lessee, upon giving thirty (30) days' written notice to the Lessor, such notice being given at least thirty (30) days prior to the last day of the succeeding month,

It is further agreed by and between the parties hereto that this Lease shall be considered canceled, pursuant to provisions of W.Va. Code §18B-19-12 (e) (2), without further obligation on the part of the Lessee, if, as determined by the Lessee, Lessee's

granting source, Tenant's granting source, West Virginia State Legislature, or the Federal Government should subsequently fail to appropriate sufficient funds therefor, or should otherwise act to impair this lease or cause it to be canceled, or in the event it shall become unlawful for the Premises to be used. In any event aforementioned, the Lessee may immediately redeliver possession of the Premises to the Lessor and thereupon be relieved from any and all obligations hereunder or concerning the Premises except for rent accruing prior to such date of redelivery.

22. MISCELLANEOUS

a. Notices. Notices may be given by personal service upon the party(s) entitled to such notice, or by certified mail, duly stamped and directed to the last-known address of the party to be notified, and deposited in the post office. The proper mailing of such notice and not the receipt thereof shall constitute the giving of such notice by either party to the other. Notices shall be directed as follows:

Lessor	**Lessee**	**Tenant**
City of Morgantown	WVU Real Estate	WVU College of Creative Arts, School of Art Design, Ceramics Department, Production Pottery
Attn: City Manager 389 Spruce Street Morgantown, WV 26505 Phone: 304.284.7405 Fax: 304.284.7430 Email: jmikorski@cityofmorgantown.org After Hours Emergency Phone: 304.288.6717	Attn: Susan McCollum P. O. Box 6555, 48 Donley Street Morgantown, WV 26506-6555 Phone: 304.293.2864 Fax: 304.293.7156 Email: susan.mccollum@mail.wvu.edu	Attn: Alison Helm PO Box 6111 Morgantown, WV 26506-6111 Phone: 304.293.4077 Fax: 304.293.5731 Email: Alison.helm@mail.wvu.edu After Hours Emergency Phone: 304.282.1230

b. Holding Over. The Tenant shall have the right to hold over for up to three (3) months after the expiration of the Term upon the same terms and conditions, including Rent, as were applicable during the just expired Term. If the Tenant shall continue in possession of the Premises beyond said three (3) month holdover period, such continued possession shall be considered an extension of this Lease from month to month until terminated by either party as of the end of any calendar month on not less than thirty (30) days prior written notice, and during such month to month tenancy, all terms and conditions of this Lease shall remain in full force and effect.

c. Vacating Responsibilities. The Tenant has the right to remove all owned fixtures, furniture, and equipment and shall leave the facility free of all trash and debris, in broom clean condition, with all keys labeled and provided to the Lessor. Given the nature of the Tenant's business, the Lessor has no expectation that the Premises will be returned in equal condition to that as originally occupied.

d. Quiet Enjoyment. The Lessor covenants that at the Start Date of this Lease, the Lessor was seized of said Premises as the sole owner(s) thereof, in fee simple, free of all liens, encumbrances and any outstanding interests whatsoever and that upon payment of the rentals as herein set forth, the Lessor will warrant and defend the title of the Lessee against any and all claims whatsoever, not arising hereunder, during the term of this Lease; that the Lessee and Tenant shall, at all times during the term of this Lease, peaceably and quietly have, hold, and enjoy the Premises.

e. Cooperative Service. The Tenant pledges to work with the Lessor in arranging and conducting community programs relative to the Tenant's field of study; the Tenant shall work cooperatively to ensure such offerings are at minimal cost to the participant as community service.

f. Force Majeure. If either party shall be delayed in the performance of any act required hereunder by reason of strikes, lockouts, inability to procure labor or materials, riots, insurrections, wars, catastrophic events or other reasons beyond the reasonable control of such party, then performance of such act shall be extended for a period equivalent to the period of such delay.

g. Authority. The Lessor hereby represents and warrants that it owns the building and underlying real property in fee simple. Each party represents and warrants that it is fully authorized to execute this Lease without obtaining the consent of any third party.

h. Binding Effect. All the terms and conditions of this Lease shall be binding upon and inure to the benefit of legal representatives, successors, and assigns of the parties.

i. Modification. This Lease shall not be amended or modified in any respect except by a writing which is duly executed by all parties.

j. Construction. The language used in this Lease was mutually negotiated by the parties and shall not be construed for or against either party. The headings in this Lease are for convenience only and are not to be construed as a part of this Lease or in any way defining, limiting, modifying or amplifying the provisions hereof. Time is of the essence of this Lease and of every term, covenant, and condition hereof.

k. Severability. If any provision of this Lease is rendered void or invalid by the decision of any court or by the enactment of any Law, such provision will be deemed to have never been included herein and the remainder of the Lease shall continue in full force and effect.

l. Entire Agreement. This Lease constitutes the entire understanding between the parties. Any representation, obligation, term or condition not contained herein is not binding on the parties.

m. Multiple Counterparts. This Lease may be executed in multiple counterparts, each of which shall constitute an original and which taken together, shall constitute one and the same Lease.

IN WITNESS WHEREOF, the parties hereto have caused their names to be affixed to this contract of lease.

LESSOR: City of Morgantown

By _____
Jeff Mikorski
City Manager

STATE OF WEST VIRGINIA
COUNTY OF MONONGALIA, TO-WIT:

I _____, notary public in and for said county and state, do hereby certify that Jeff Mikorski, who as City Manager signed the foregoing lease for City of Morgantown, Lessor, has this day acknowledged the same before me in my said county and declared the same to be the act and deed of said corporation.

Given under my hand this _____ day of _____, 2013.

My commission will expire _____ 20__ .

_____
NOTARY PUBLIC

LESSEE: WEST VIRGINIA UNIVERSITY BOARD OF GOVERNORS, on behalf of West Virginia University;
James P. Clements, President

By_____
Narvel G. Weese Jr.
Vice President
Administration and Finance

STATE OF WEST VIRGINIA
COUNTY OF MONONGALIA, TO-WIT:

I _____, notary public in and for said county and state, do hereby certify that Narvel G. Weese, Jr., who, as Vice President for Administration and Finance, signed the foregoing lease for the West Virginia University Board of Governors on behalf of West Virginia University, Lessee, has this day acknowledged the same before me in my said county and declared the same to be the act and deed of said agency.

Given under my hand this _____ day of _____, 2013.

My commission will expire _____, 20__.

_____
NOTARY PUBLIC

Appendix A

SCALE: 1" = 10'

Second Floor School

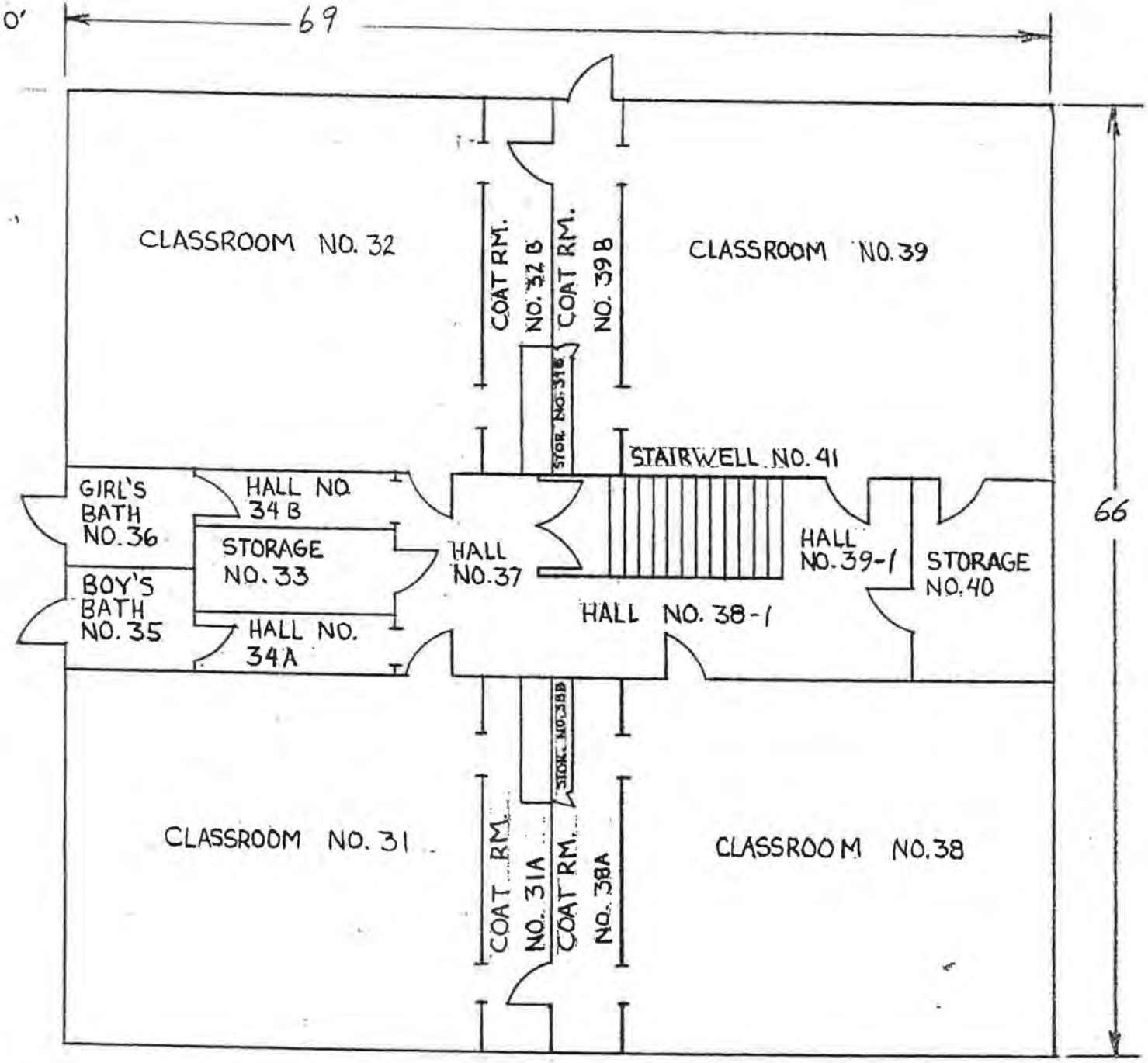

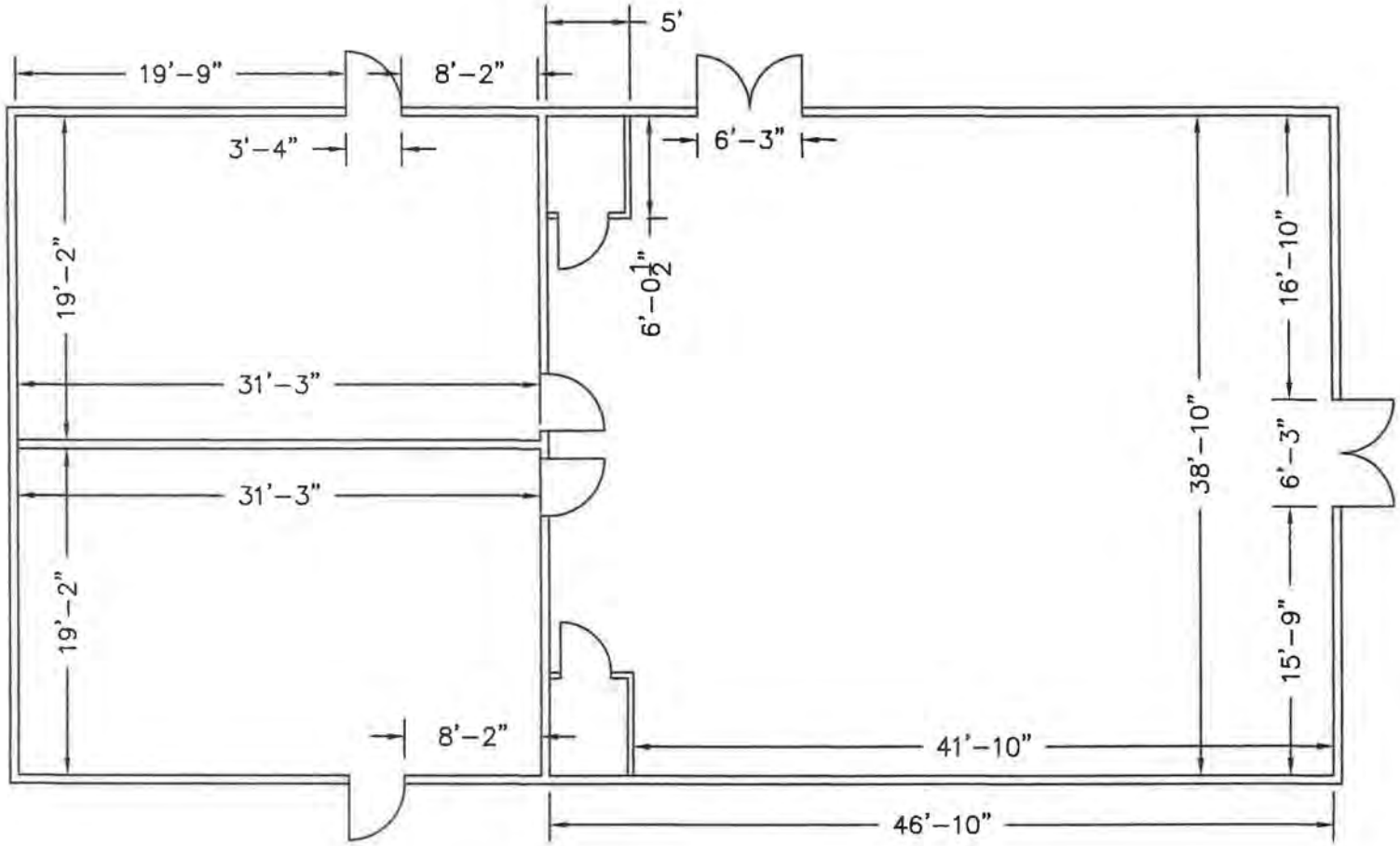

MULTI-PURPOSE BUILDING

SCALE: 3/32" = 1'-0"

DRAWN BY: TREVOR LLOYD	DATE: 06-14-13	REVISION:	DATE:	c:\DPP\logo3-trav-sp.bmp	CITY OF MORGANTOWN PUBLIC WORKS DEPARTMENT 389 Spruce Street • Morgantown, WV 26505 • 304-284-7412	DRAWING TITLE: MULTI-PURPOSE BUILDING WOODBURN SCHOOL Morgantown, West Virginia	PROJECT NUMBER
DESIGN BY:	DATE:						DRAWING NUMBER
CHECKED BY:	DATE:						SHT. 1 OF 1
APPROVED BY:	DATE:						
SCALE: AS SHOWN							

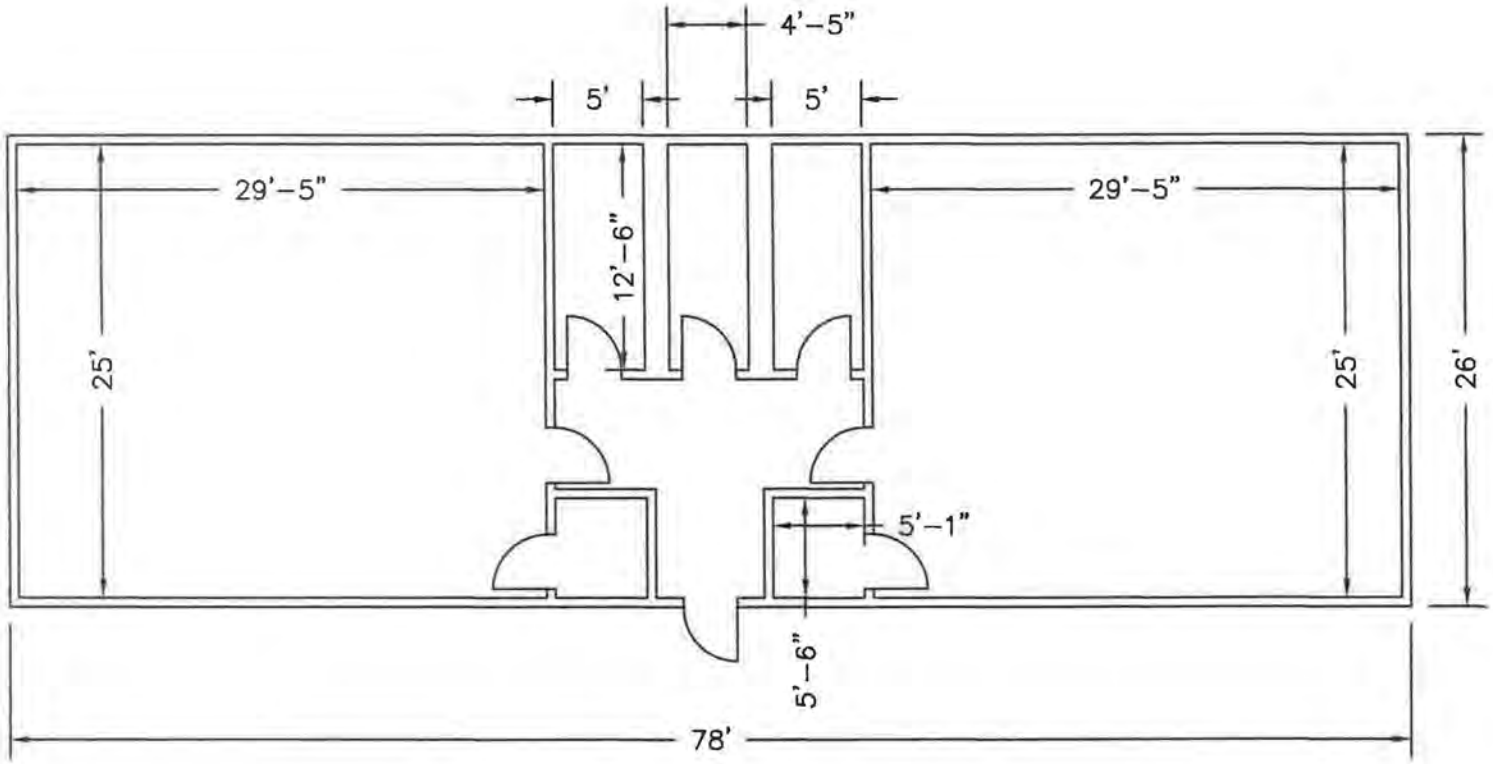

MODULAR BUILDING

SCALE: 3/32" = 1'-0"

DRAWN BY: TREVOR LLOYD	DATE: 06-14-13	REVISION:	DATE:	CITY OF MORGANTOWN PUBLIC WORKS DEPARTMENT 389 Spruce Street • Morgantown, WV 26505 • 304-284-7412	DRAWING TITLE: MODULAR BUILDING WOODBURN SCHOOL Morgantown, West Virginia	PROJECT NUMBER	DRAWING NUMBER
DESIGN BY:	DATE:						
CHECKED BY:	DATE:						
APPROVED BY:	DATE:						SHT. 1 OF 1
SCALE: AS SHOWN							

AN ORDINANCE BY THE CITY OF MORGANTOWN AUTHORIZING IT, AS LESSOR, TO LEASE SPACE AT THE FORMER WOODBURN SCHOOL, NOW OWNED BY THE CITY, TO THE MOUNTAINEER BOYS AND GIRLS CLUB, INC., LESSEE.

The City of Morgantown hereby ordains that its City Manager is authorized to execute the attached lease agreement by and on behalf of the City of Morgantown.

FIRST READING:

_____
MAYOR

ADOPTED:

FILED:

_____
CITY CLERK

RECORDED:

CONTRACT OF LEASE

THIS CONTRACT OF LEASE ("Lease"), made this 6th Day of November, 2013, by and between City of Morgantown, a municipal corporation, hereinafter referred to as "Lessor," and Mountaineer Boys and Girls Club, Inc., a West Virginia Non-Profit Corporation, hereinafter also referred to as "Lessee."

In consideration of the full and complete performance of the covenants, terms, and provisions contained herein, The Lessor and Lessee agree to the following:

1. BASIC LEASE PROVISIONS

The Basic Lease Provisions have been presented as follows for the purpose of restating certain terms of the Lease in a summary format. Their being so presented is not in derogation of the importance of any other provisions of this Lease, and shall not imply that such Basic Lease Provisions are to be construed in any other manner than in the context of all of the other terms and conditions of this Lease, taken as a whole.

a. Premises: Address: 918 Forney Street, Morgantown, WV
Size: 6,116 square feet
Defined Area: Former elementary school first floor.

b. Rent:

Annual Cost per Square Foot:	$1.96
Cost per Month:	$1,000
Cost per Year:	$12,000

c. Initial Term of Lease: Beginning on November 6, 2013, and ending on June 30, 2015.

d. Renewal Option: Automatic Annual Renewals for the months of July through June unless canceled by either party, with provision of four months' notice prior to June 30th. Rent for each annual renewal period to be adjusted by CPI.

e. Right of First Refusal for Additional Space: NONE

f. Lessee: Mountaineer Boys and Girls Club, Inc.

2. PREMISES; COMMON AREAS

The Lessor hereby leases to the Lessee, and Lessee hereby leases from Lessor, the leased premises described in Sections 1a above and as further described as follows ("Premises"):

Portions of a 9,108 square foot former elementary school, being the first floor containing approximately 3,579 square feet, and approximately 2,537 square feet identified as the old school gym, for a total of 6,116 rented square feet, located at 918 Forney Street, Morgantown, Monongalia County, West Virginia, as illustrated in Exhibit A. The leased premise shall also include the "shared use" of the basement lunchroom.

In addition, the Lessee, its employees, representatives, agents, customers, guests and invitees shall have the right to use all driveways, parking areas, sidewalks, lobbies, elevators, hallways, restrooms, and other common facilities and areas (collectively, "Common Areas"), if any, in or about the building containing said Premises, jointly with other tenants and their respective representatives, agents, customers, guests and invitees. The Lessor will maintain the Common Areas in a clean, safe and sanitary condition and provide all necessary janitorial service, snow removal, maintenance and repair, and utilities to all Common Areas.

3. TERM

The initial term of this Lease, subject to the provisions hereof, shall begin on November 6, 2013 and end at midnight on June 30, 2015. PROVIDED HOWEVER, this Lease may be canceled by the Lessee as hereinafter provided in Sections 8, 10 and 21, before the end of the term. This Lease shall be considered renewed for each succeeding City fiscal year during the Term of the Lease unless this Lease is canceled by the Lessee before the end of the then current fiscal year pursuant to Section 21 hereunder.

4. RENT

The Lessee covenants that the Lessee shall pay rent unto the Lessor, as rent for the Premises herein leased and all Common Areas, the sum of One Thousand dollars ($1,000.00) per month, payable in arrears, upon receipt of invoice from the Lessor to the Lessee.. Invoices shall be prepared by the Lessor and provided to the Lessee for payment processing. Lessor shall also be provided reimbursement for a prorated share of certain expenses as further described in Section 8 a ("Additional Rent").

5. FIRST RIGHT OF REFUSAL FOR ADDITIONAL SPACE – NONE

6. RENEWAL OPTION

After the initial Term, the Lease will automatically renew from year to year, for the months of July through June; provided, however, that either party may, at its option, cancel an upcoming renewal period by giving written notice unto the other 120 days prior to any June 30th of their desire for the expiration. Rent for subsequent renewal years shall increase by percentage of difference in the Consumer Price Index, as published by the Bureau of Labor Statistics of the U.S. Department of Labor, based on US City Average, All Items, with comparison of the term start date to the month of April

of the expiring year. The new rental rate shall be officiated by correspondence and, unless there other changes to the Lease, shall not require an addendum to officiate.

7. UTILITIES AND OTHER RELATED SERVICES

a. The Lessor shall furnish and timely pay when due and payable, at no additional cost to the Lessee, the following utilities and/or services:

(i) Utilities which are not separately metered, to be paid by the Lessor, who shall seek a fifty percent (50%) reimbursement as Additional Rent from the Lessee by separate invoice, providing evidence of payment made.

(ii) Custodial services in the common areas used by other tenants.

(iii) Ground maintenance, including mowing, landscaping, and parking lot maintenance.

(iv) Snow removal, to be paid by the Lessor, who shall seek a fifty percent (50%) reimbursement as Additional Rent from the Lessee by separate invoice, providing evidence of payment made.

b. The Lessee, at its expense, shall furnish and provide payment to the applicable company or vendor for the following utilities and/or services:

(i) Custodial Services in the Premises.

(ii) Trash services, for which the Lessee may choose to partner with the neighboring tenants.

(iii) Telephone and internet connectivity services.

(iv) The Lessee shall have the right to rekey, install a key card access system, or any other security system for the Premises, using such security services provider as the Lessee and Tenant may choose in its sole discretion. The Lessee at its sole discretion, can elect to remove said system at any time, provided that Lessee, at its sole expense, shall repair any damage resulting from such removal.

(v) Lessee agrees to schedule the use of the Community Room to Woodburn Neighborhood Association or other community groups that want to utilize their Community Room, unless Lessee is using the room for Boys and Girls Club business at that time/date or is unable to unlock the room at the time/date requested.

c. Interruption. In the event that any utilities or services being provided by the Lessor are interrupted for reasons within the Lessor's control and as a result, suitability of the Premises is interrupted, the Lessee shall have the option to (i) cause the utilities or services to be reinstated and deduct the costs and expense thereof from the rents which may become due and payable thereafter to the Lessor until the Lessee is fully reimbursed for such expenditures; or (ii) immediately terminate this Lease.

8. MAINTENANCE

The Lessor binds itself to maintain the Premises, including the structure of the Premises, both interior and exterior; the electrical, HVAC and plumbing fixtures and equipment; and the interior and exterior painting and flooring in a good and tenantable condition equal to that of the Premises as at the time possession thereof is delivered to the Lessee; included in the aforementioned obligation is the duty to replace HVAC filters and light bulbs on a regular schedule or upon request by the Lessee.

If the Lessor fails to maintain the interior and exterior structure of the Premises, and the electrical, HVAC and plumbing fixtures and equipment owned by the Lessor in a good and tenantable condition of repair, the Lessee shall request the Lessor, in writing, to correct any deficiency which may have occurred since possession of the Premises by the Lessee, provided, however, such deficiency was not caused by the neglect or acts of the Lessee. Upon refusal or neglect of the Lessor to comply with the Lessee's request for the repair or reinstatement of previously-existing conditions, the Lessee may, ten (10) days after receipt of such request by the Lessor, cause the repairs to be made and deduct the costs and expense thereof from the rents which may become due and payable thereafter to the Lessor until the Lessee is fully reimbursed for such expenditures. Provided however, any such repairs related to life and safety issues, including without limitation, broken windows, hot water heater, smoke detectors, carbon monoxide detectors shall be repaired immediately, or the Lessee may (i) cause the repairs to be made and deduct the costs and expense thereof from the rents which may become due and payable thereafter to the Lessor until the Lessee is fully reimbursed for such expenditures; or (ii) immediately terminate this Lease.

Notwithstanding the foregoing, the Lessor is not responsible for maintenance of such fixtures and equipment as may be owned by the Lessee.

9. DAMAGE TO PREMISES BY FIRE, ETC.

It is agreed by and between the parties hereto that in the event the Premises are destroyed or damaged by fire, natural elements, or other cause to such an extent that continued occupancy by the Lessee would be impractical, the Lessee shall give immediate notice thereof to the Lessor, in writing, and this lease shall terminate. If only a part of the Premises shall be rendered untenable, leaving the remainder suitable for occupancy, the rental shall be proportionately abated until the Premises have been

repaired. The Lessor shall have five (5) days from receipt of such notice to decide whether or not to repair the Premises. Any repairs undertaken must be completed within a reasonable length of time after the Lessor's decision. Should the Lessor decide not to repair the Premises, this Lease shall terminate, and the Lessee shall deliver possession of the Premises to the Lessor and thereupon be relieved of any and all liability hereunder or concerning the Premises except for any unpaid rent through the final day of occupancy.

10. INDEMNIFICATION AND INSURANCE

Section 10.1 Lessee shall protect, defend, indemnify, and hold the Lessor and its representatives and employees completely harmless from and against any and all liabilities, demands, suits, claims, losses, fines, or judgments arising by reason of the injury or death of any person or damage to or loss of any property, including all reasonable costs for investigation and defense thereof, (including, but not limited to, attorney fees, court costs, and expert fees), of any nature whatsoever arising out of, or incidental to this Lease Agreement or Lessee's use or occupancy of the leased premises, or the acts or omissions of the Lessee, its officers, employees, agents, representatives, contractors, sub-contractors, licensees or invitees, regardless of where the injury, death, loss, or damage may occur unless such injury, death, loss, or damage is caused by the negligence of the Lessor, its employees, agents, officers, or representatives. The Lessor shall give Lessee reasonable notice of any such claims or actions. The provisions of this Article shall survive the expiration or earlier termination of this Lease Agreement.

Section 10.2 Without limiting its liability as aforesaid, the Lessee shall carry insurance in the following minimum amounts during the term hereof, naming the Lessor as con-insured:

Public Liability	Bodily Injury .....$500,000 per occurrence
	Property Damage.....$50,000 per occurrence

Section 10.3 Lessee shall provide the Lessor with certification of insurance through the term of this Agreement, evidencing such coverage to be in force.

Section 10.4 The Lessor agrees to notify the Lessee in writing, as soon as practicable, of any claims, demands, or action arising out of an occurrence covered hereunder of which the Lessor has knowledge, and to cooperate with the Lessee in the investigation and defense thereof.

11. SUITABILITY OF PREMISES

The Lessor warrants the Premises to be suitable for use for the conduct of Lessee's business., and that there shall be no liability on the part of Mountaineer Boys and Girls club, its officers, agents or employees for any loss or damage to the Premises, nor any liability on any individual by virtue of any of the provisions of this Lease,

whether caused by overloading the floors with equipment or otherwise installing fixtures and equipment commonly used in an office facility. Further, the Lessor warrants that the Premise compliant according to all local, state, and federal code requirements and all zoning ordinances.

a. Fire and Health Hazards. The Lessor will remove and correct any fire or health hazards not caused by the neglect or acts of the Lessee, its agents, employees or servants which any authorized public authority may order corrected or removed during the term of this lease. Upon refusal or neglect of the Lessor to comply with any such order, the Lessee may comply therewith and deduct the costs from monthly rentals payable thereafter to the Lessor until the Tenant is fully reimbursed therefore.

b. Environmental. The Lessor represents and warrants to the Lessee that there are no hazardous or unsafe substances in, on or under the Premises, building or Common Areas or the underlying real property, and agrees to indemnify, defend and hold harmless the Lessee, its affiliates, and their respective officers, agents and employees, against any and all claims, damages, costs, liabilities and expenses, including attorneys' fees, resulting from a breach of the Lessor's representations and warranties or from the presence of any hazardous or unsafe substances in, on or under the Premises, building, Common Areas or the underlying real property, as of the Start Date.

12. NEGLECT OF PREMISES

The Lessee covenants that it shall not commit waste on the Premises herein leased, and the Premises will be returned to the Lessor at the termination of this Lease in substantially as good condition as at the commencement thereof, damages from reasonable wear and tear, natural elements, normal depreciation and decay excepted.

13. TRANSFER OR ASSIGNMENT OF LEASE

The Lessee shall have the right to assign, reassign, or transfer this Lease contingent upon the prior written approval of the Lessor.

14. DEFAULT

In the event any party defaults in any of the covenants contained herein, the requesting party shall notify the other, in writing, of such default and if such default is not corrected within fifteen (15) days after receipt of notification, unless a shorter correction period is required elsewhere in this Lease, the requesting party may notify the other party that the Lease is terminated, without further obligation, and reenter/vacate the Premises herein leased.

15. TAXES AND ASSESSMENTS

The Lessor will pay taxes and assessments levied on the Premises during the term of this lease.

16. PARKING

The Lessor agrees to provide, at no additional cost to the Lessee, free employee and visitor parking spaces immediately adjacent to the Premises.

17. PROVISIONS FOR IMMEDIATE TERMINATION

In addition to the other events set forth herein which permit the immediate termination of this Lease, the Lessee shall have the right to cancel this lease, without further obligation on the part of the Lessee, upon giving thirty (30) days' written notice to the Lessor, such notice being given at least thirty (30) days prior to the last day of the succeeding month,

18. MISCELLANEOUS

a. Notices. Notices may be given by personal service upon the party(s) entitled to such notice, or by certified mail, duly stamped and directed to the last-known address of the party to be notified, and deposited in the post office. The proper mailing of such notice and not the receipt thereof shall constitute the giving of such notice by either party to the other. Notices shall be directed as follows:

Lessor
City of Morgantown
Attn: City Manager
389 Spruce Street
Morgantown, WV 26505
Phone: 304-284-7405
Fax: 304.284.7430
Email:
jmikorski@cityofmorgantown.org
After Hours Emergency Phone:
304.288.6717

Lessee
Mountaineer Boys and Girls Club, Inc.,
Address:
Attn: Denny Poluga
Morgantown, WV
Phone:
Fax:
Email

b. Holding Over. The Lessee shall have the right to hold over for up to three (3) months after the expiration of the Term upon the same terms and conditions, including Rent, as were applicable during the just expired Term. If the Lessee shall continue in possession of the Premises beyond said three (3) month holdover period, such continued possession shall be considered an extension of this Lease from month to month until terminated by either party as of the end of any calendar month on not less than thirty (30) days prior written notice, and during such month to month tenancy, all terms and conditions of this Lease shall remain in full force and effect.

c. Vacating Responsibilities. The Lessee has the right to remove all owned fixtures, furniture, and equipment and shall leave the facility free of all trash and debris, in broom clean condition, with all keys labeled and provided to the Lessor. The Premises will be returned to Lessor by Lessee in equal condition to that as originally occupied.

d. Quiet Enjoyment. The Lessor covenants that at the Start Date of this Lease, the Lessor was seized of said Premises as the sole owner(s) thereof, in fee simple, free of all liens, encumbrances and any outstanding interests whatsoever and that upon payment of the rentals as herein set forth, the Lessor will warrant and defend the title of the Lessee against any and all claims whatsoever, not arising hereunder, during the term of this Lease; that the Lessee shall, at all times during the term of this Lease, peaceably and quietly have, hold, and enjoy the Premises.

e. Force Majeure. If either party shall be delayed in the performance of any act required hereunder by reason of strikes, lockouts, inability to procure labor or materials, riots, insurrections, wars, catastrophic events or other reasons beyond the reasonable control of such party, then performance of such act shall be extended for a period equivalent to the period of such delay.

f. Authority. The Lessor hereby represents and warrants that it owns the building and underlying real property in fee simple. Each party represents and warrants that it is fully authorized to execute this Lease without obtaining the consent of any third party.

g. Binding Effect. All the terms and conditions of this Lease shall be binding upon and inure to the benefit of legal representatives, successors, and assigns of the parties.

h. Modification. This Lease shall not be amended or modified in any respect except by a writing which is duly executed by all parties.

i. Construction. The language used in this Lease was mutually negotiated by the parties and shall not be construed for or against either party. The headings in this Lease are for convenience only and are not to be construed as a part of this Lease or in any way defining, limiting, modifying or amplifying the provisions hereof. Time is of the essence of this Lease and of every term, covenant, and condition hereof.

j. Severability. If any provision of this Lease is rendered void or invalid by the decision of any court or by the enactment of any Law, such provision will be deemed to have never been included herein and the remainder of the Lease shall continue in full force and effect.

k. Entire Agreement. This Lease constitutes the entire understanding between the parties. Any representation, obligation, term or condition not contained herein is not binding on the parties.

l. Multiple Counterparts. This Lease may be executed in multiple counterparts, each of which shall constitute an original and which taken together, shall constitute one and the same Lease.

IN WITNESS WHEREOF, the parties hereto have caused their names to be affixed to this contract of lease.

LESSOR: City of Morgantown

By _____
Jeff Mikorski
City Manager

STATE OF WEST VIRGINIA
COUNTY OF MONONGALIA, TO-WIT:

I _____, notary public in and for said county and state, do hereby certify that Jeff Mikorski, who as City Manager signed the foregoing lease for City of Morgantown, Lessor, has this day acknowledged the same before me in my said county and declared the same to be the act and deed of said corporation.

Given under my hand this _____ day of _____, 2013.

My commission will expire _____ 20__ .

_____
NOTARY PUBLIC

LESSEE: Mountaineer Boys and Girls Club, Inc.

_____
President

_____
Director

STATE OF WEST VIRGINIA
COUNTY OF MONONGALIA, TO-WIT:

I _____, notary public in and for said county and state, do hereby certify that _____.and _____, who, are President and Director of the Mountaineer Boys and Girls Club, Inc. signed the foregoing lease for the West Virginia University Board of Governors on behalf of West Virginia University, Lessee, has this day acknowledged the same before me in my said county and declared the same to be the act and deed of said agency.

Given under my hand this _____ day of _____, 2013.

My commission will expire _____, 20__.

_____
NOTARY PUBLIC

Appendix A

WOODBURN ELEMENTARY SCHOOL
FIRST FLOOR

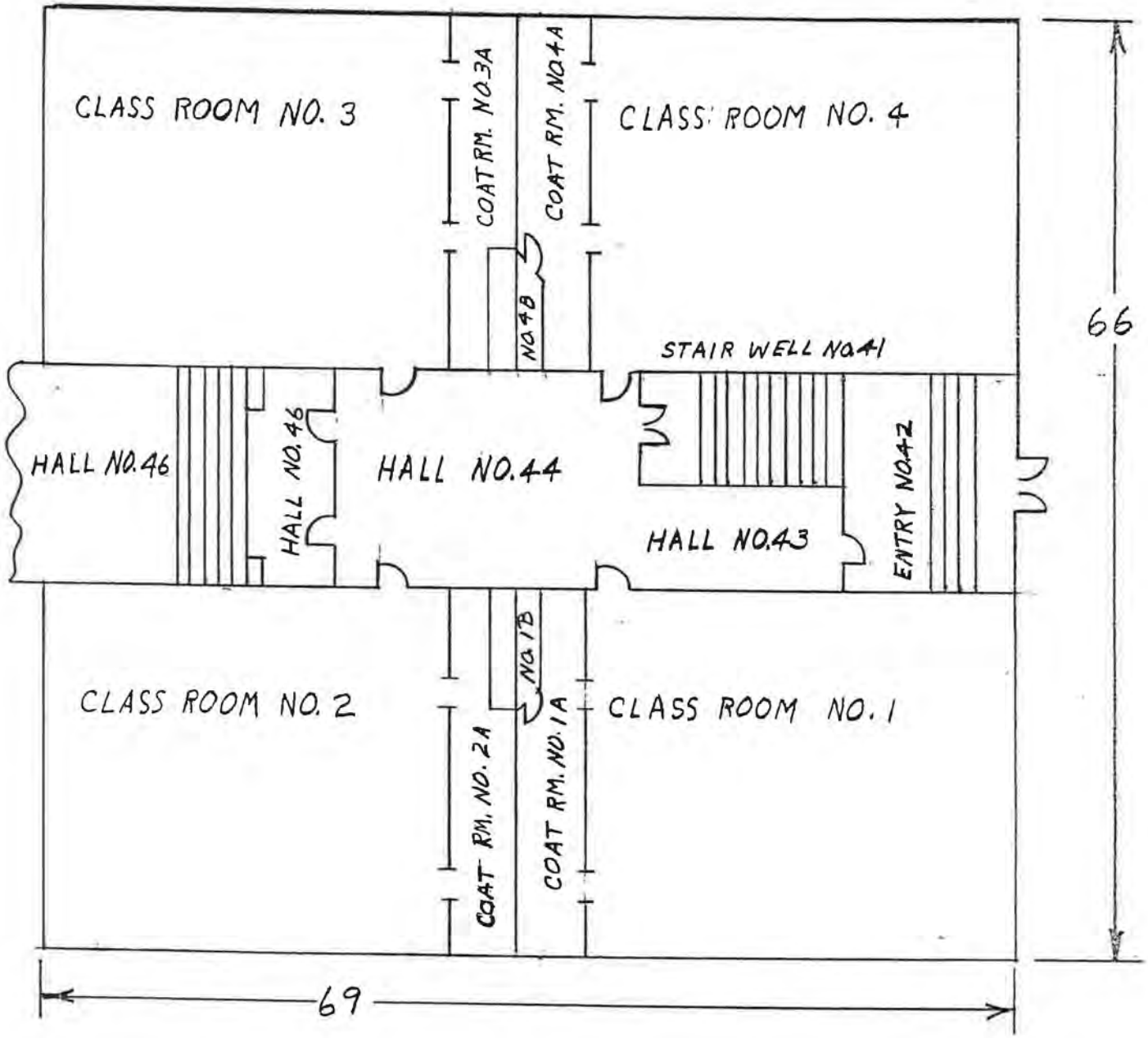
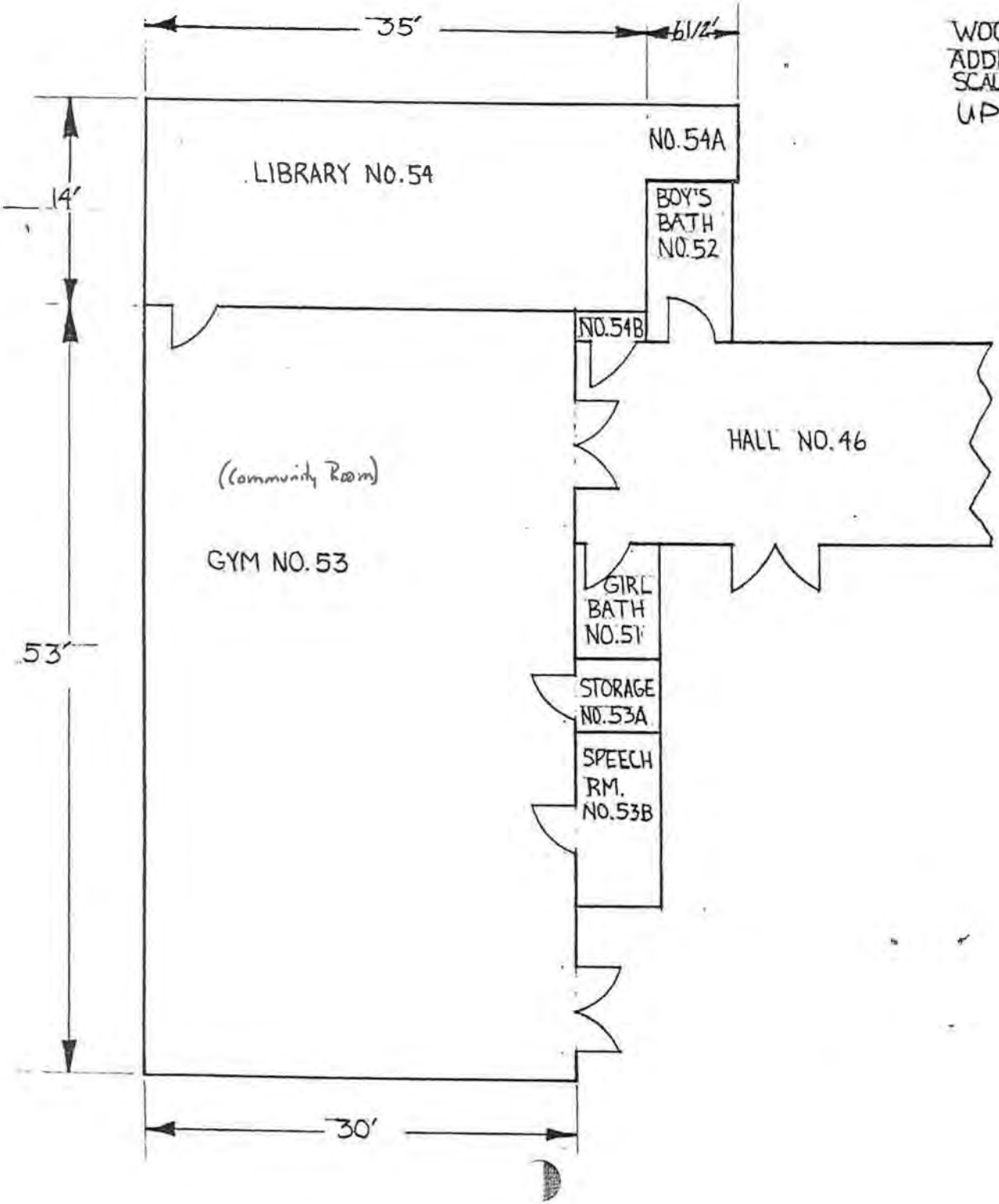
WOODBURN ELEMENTARY
ADDITION
SCALE: 1" = 10'
UPDATED FLR PLN 8.2.9