MORGANTOWN BOARD OF ZONING APPEALS

October 16, 2013
6:30 PM
City Council Chambers

Board Members:
Bernie Bossio, Chair
Leanne Cardoso, Vice-Chair
George Papandreas
Tom Shamberger
Jim Shaffer

STAFF REPORT

CASE NO: CU13-18 / Micro Outdoors Advertising, LLC / 1974 Hunters Way

REQUEST and LOCATION:

Request by Russ Bonasso, on behalf of Micro Outdoors Advertising, LLC, for conditional use approval of a "Billboard Sign" use located at 1974 Hunters Way.

TAX MAP NUMBER(s) and ZONING DESCRIPTION:

Tax Map 44A, Parcel 10, B-2, Neighborhood Business District

SURROUNDING ZONING:

B-2, Neighborhood Business District

BACKGROUND:

Under the major zoning ordinance amendment enacted in January 2006, the Morgantown community significantly restricted the development of billboards and off-premise pole or pylon signs. In doing so, an overlay district was created in proximity to federal interstate rights-of-way within which these types of signs are permitted.

In reviewing the zoning ordinance text and zoning map, there was a conflict between how the overlay district's boundary was described and how it was illustrated. Specifically, Article 1359 described the overlay district boundaries as to within 500 feet of a federal interstate right-of-way. However, the official zoning map illustrated the ISOD, Interstate Sign Overlay District boundary to, what appeared to be, 500 feet from the I-68 centerline. The resultant overlay district as illustrated on the zoning map was contained entirely within the I-68 right-of-way. The West Virginia Division of Highways (WVDOH) does not permit signs to be erected within a right-of-way for which it controls and maintains.

Article 1329.01(D) "Rules of Construction, Intent, and Usage" provides that, "In case of conflict between regulations the more restrictive shall apply."

In this case, the official zoning map was more restrictive but resulted in an area where these types of signs may not be erected due to WVDOH restrictions. As such, the City of Morgantown inadvertently enacted restrictions that made the development of these types of signs impossible.

The City Attorney maintains that, in West Virginia, all land use types must be permitted somewhere within a community that has enacted land use and land development regulations. On this basis, the City of Morgantown had to reassess its enacted regulations to identify an acceptable area for billboards and off-premise pole or pylon signs to be permitted.

Development Services
Christopher Fletcher, AICP
Director

Planning Division
389 Spruce Street
Morgantown, WV 26505
304.284.7431

Board Members:
Bernie Bossio, Chair
Leanne Cardoso, Vice-Chair
George Papandreas
Tom Shamberger
Jim Shaffer

ON 10 JAN 2013, the Planning Commission recommended amendments to address the conflict between the zoning ordinance text and zoning map. The amendments were enacted by City Council on 06 MAR 2013 and related ordinances are attached hereto as Exhibit 1.

ANALYSIS:

The petitioner seeks to erect an approximate 440 square foot digital "Billboard Sign" at the southern end of the former Sterling Faucet site in Sabraton closest to the I-68 westbound exit ramp intersection with State Route 7. Addendum A of this report illustrates the general location of the proposed billboard sign.

The development of a "Billboard Sign" is restricted to the ISOD, Interstate Sign Overlay District, which is located within 500 feet of a Federal Interstate Highway right-of-way but not within a residential district.

Addendum B of this report identifies the design, performance, and conditional use application requirements for billboard sign development along with development program details submitted by the petitioner.

STAFF RECOMMENDATION:

The Board of Zoning Appeals must determine whether the proposed requests meet the standard criteria for a conditional use by reaching a positive determination for *each* of the "Findings of Fact" submitted by the applicant. Addendum C of this report provides Staff recommended revisions to the petitioner's findings of fact (deleted matter struck through; new matter underlined).

Staff recommends the following conditions be included in the Board's approval of Case No. CU13-18:

1. That the digital billboard sign for which conditional use approval is granted herein must comply with the following conditions:

    a. Digital message display must be static or stationary and may not contain any visible moving parts, alternating or moving messages or have the appearance of having moving parts or messages.

    b. Digital message display may not flash, undulate, pulse, move, scroll, or portray explosions, fireworks, flashes of light, or blinking lights or otherwise appear to move toward or away from the view, expand or contract, bounce, rotate, spine twist or make other comparable movements.

    c. The digital billboard sign's frames, borders, and all structural members must be black, with no illumination and no writing or symbols other than the identification (name and/or logo) of the sign owner/operator.

    d. A City building permit must be issued prior to the installation or modification of the subject digital billboard.

Development Services
Christopher Fletcher, AICP
Director

Planning Division
389 Spruce Street
Morgantown, WV 26505
304.284.7431

Board Members:
Bernie Bossio, Chair
Leanne Cardoso, Vice-Chair
George Papandreas
Tom Shamberger
Jim Shaffer

e. The petitioner must file with the related building permit application a certificate of insurance naming the City as coinsured and certifying that the applicant and City are insured against bodily injury and for property damage arising out of the erection, maintenance, repair, and replacement of the sign. The petitioner shall maintain said insurance and keep a certificate of insurance currently effective on file with the City Manager's Office so long as the sign is in existence. The certificate shall provide that the City shall receive ten (10) days written notice in case of cancelation of the policy.

f. The petitioner must obtain any and all required approvals from State and/or Federal reviewing and approval authorities prior to the issuance of the City's building permit.

g. The display or message on the subject digital billboard sign may change no more frequently than once every ten (10) seconds. Any change in message or copy must be completed instantaneously.

h. The subject digital billboard sign must have a light sensing device to adjust brightness as ambient light conditions change in order to insure that the message meets the following brightness standard. Maximum brightness levels for digital billboards may not exceed 0.2 (two tenths) foot-candles over ambient light levels measured within 150 feet of the sign. Certification must be provided to the City demonstrating that the sign has been preset to automatically adjust the brightness to these levels or lower. Certified re-inspection and recalibration shall be annually required by the City, in its reasonable discretion, at the sign owner/operator's expense to ensure that the specified brightness levels are maintained at all times. Brightness of the subject digital billboard shall be measured as follows:

   i. At least 30 minutes following sunset, a foot-candle meter shall be used to obtain an ambient light reading for the location. This is done while the sign is off or displaying black copy. The reading shall be made with the meter aimed directly at the sign area at the pre-set location.

   ii. The sign shall then be turned on to full white copy to take another reading with the meter at the same location.

   iii. If the difference between the readings is 0.2 (two tenths) foot-candles or less, the brightness is properly adjusted.

i. Consecutive messages on a single digital or electronic sign face (digital slots) are prohibited when the second message answers a textual question posed on the prior slot, continues or completes a sentence started on the prior slot, or continues or completes a story line started on the prior slot. Nothing in the subsection shall prohibit consecutive messages by the same advertiser or consecutive messages for the same product or service; provided, that the second of such advertisements does not answer textual questions posed on the prior advertisement slot, continue or complete a sentence started on the prior advertisement slot, or continue or complete a story line started on the prior advertisement slot. For example, consecutive advertisements by a

Development Services
Christopher Fletcher, AICP
Director

Planning Division
389 Spruce Street
Morgantown, WV 26505
304.284.7431

Board Members:
Bernie Bossio, Chair
Leanne Cardoso, Vice-Chair
George Papandreas
Tom Shamberger
Jim Shaffer

single grocery store advertising the same or multiple products are permitted provided that such advertisements do not answer textual questions from one slot to the next slot, continue or complete a sentence from one slot to the next slot, or continue or complete a story line from one slot to the next slot.

j. The subject digital billboard sign must have a default mechanism or setting that will cause the sign to turn off or show a "full black" image if a visible malfunction or failure occurs.

k. The subject digital billboard sign shall not be configured to resemble a warning or danger signal. The sign shall not resemble or simulate any lights or official signage used to control traffic.

2. That the petitioner shall submit a certified as-built survey, prepared by an engineer or surveyor licensed to practice in West Virginia, within 60 days of substantial construction completion to the Planning Division that illustrates information required in the conditional use application survey set forth in Article 1359.04 and confirms constructed conditions observe the following setback requirements:

   a. The location of the constructed digital billboard sign is within 500 feet of the federal Interstate 68 right-of-way.

   b. The location of the constructed digital billboard sign is greater than 300 feet from a residential zoning district.

   c. The location of the constructed digital billboard sign is greater than 15 feet from any parcel boundary line of the property on which the subject sign is located.

3. *INSERT IF SO DECIDED BY THE BOARD* – That, for the purpose of preserving the character and repose of adjacent residential areas, the subject digital billboard sign must be turned off or display a full black image between INSERT TIME PERIOD.

Attachments: Application and submitted exhibits.

Development Services
Christopher Fletcher, AICP
Director

Planning Division
389 Spruce Street
Morgantown, WV 26505
304.284.7431

STAFF REPORT ADDENDUM A

CU13-18 / Micro Outdoors Advertising, LLC / 1974 Hunters Way

STAFF REPORT ADDENDUM B

CU13-18 / Micro Outdoors Advertising, LLC / 1974 Hunters Way

The following table provides a conformity review of the above referenced "Billboard Sign" use development under related Planning and Zoning Code provisions, as amended by ordinances enacted 05 MAR 2013.

Article	Standard	Observation
1359.01	The ISOD, Interstate Sign Overlay District is within 500 feet of a Federal Interstate Highway right-of-way but may not be applied over any residentially zoned property.	According to the petitioner's submitted site plan survey prepared by Greenleaf Surveying Company (dated 28 OCT 2013), the proposed location of the sign is approximately 40 feet from the controlled access (C/A) right-of-way for Interstate 68. The zoning classification for the subject property is B-2.
1359.02(A)	"Billboard Sign" types require conditional use approval by the BZA.	Conditional use application has been submitted.
1359.02(B)	No more than one pole or pylon sign or billboard sign may be located on a parcel.	According to the petitioner, there are no other pole, pylon, or billboard signs located on the subject parcel.
1359.02(C)(1)	Spacing. Billboard signs may not be located within 1,000 feet of any other billboard sign (measure inside and outside of Morgantown Corporate Limits).	According to the petitioner's response to Finding of Fact No. 4, "There are no other billboards within 2,000+ feet."
1359.02(C)(2)	Spacing. Internal, external, or digital/electronic illuminated billboard signs may not be located within 300 feet of a residential zoning district.	According to the petitioner's submitted site plan survey prepared by Greenleaf Surveying Company (dated 28 OCT 2013), the proposed location of the subject digital/electronic illuminated sign is 301 feet from the eastern edge of the "Controlled Access Right-of-Way for Interstate 68", which also adjoins the nearest R-1A District.

Article	Standard	Observation
1359.02(D)	Height. The maximum sign height for billboard signs shall be determined by the BZA, after considering evidence supplied by the applicant that clearly demonstrates, to the satisfaction of the Board, that the requested height is necessary. The Board shall take into account the horizontal distance the sign will be from the travel lanes of the roadway, the difference in elevation between the property grade and the roadway grade, and the advice of the City Engineer and/or Planning Director. The Board may approve the height requested by the applicant, or any other height that it deems is warranted given the facts of the case.	According to the petitioner's submitted site plan survey prepared by Greenleaf Surveying Company (dated 28 OCT 2013), the proposed height of the sign, from grade to bottom of sign, is 63 feet. According to the petitioner's submitted sign plan prepared by Selective Structures, LLC (dated 17 JAN 2010), the overall height of the sign, from grade to top of sign, is 77 feet. The height of the sign in relation to the roadway grade was not provided. Based on topographic mapping there appears to be an elevation change of approximately 50 feet from the grade of the approximate billboard sign base location to nearest centerline of Route 7.
1359.02(E)	Area. The maximum area for billboard signs is 450 feet. The surface display area of a billboard sign is measured to include the entire area within a regular geometric form or combinations thereof comprising all of the display area of the sign, including all of the elements of the matter displayed. Frame and structural members, excluding necessary supports or uprights, are included in computation of the surface display area. The regulations regarding computation of sign area for double-side and V-type signs in Article 1369 apply. Specifically, where the sign faces of a double-faced sign are parallel or the interior angle formed by the faces is 60 degrees or less, only one display face is measured in computing sign area.	According to the petitioner's submitted digital sign plan prepared by Formetco (dated 25 OCT 2013), the display area is 39'-10 $^{7}/_{8}$" wide by 11'-0 ¼" tall. According to the petitioner's submitted sign plan prepared by Selective Structures, LLC (dated 17 JAN 2010), the structural frame is 40'-0" wide by 11'-0" tall or 440 square feet. However, there is also a 2'-6" tall service catwalk below the sign's digital display panel; the square footage of which is to be included in computing the surface display area. In doing so, the overall sign area would exceed the maximum area standard of 450 square feet. Staff will recommend that, as a conditional of approval, the catwalk facility be eliminated so that the billboard sign area is less than 450 square feet. According to the petitioner's submitted sign plan prepared by Selective Structures, LLC (dated 17 JAN 2010), the interior angle between the double-faced sign is 59 degrees. Therefore, only one display face is measured.
1359.02(F)	Setback. No billboard sign may be located within 15 feet of any parcel boundary line of the property on which the subject sign is located.	According to the petitioner's submitted site plan survey prepared by Greenleaf Surveying Company (dated 28 OCT 2013), the proposed location of the sign is greater than 15 feet from the nearest parcel boundary.

Article	Standard	Observation
1359.02(G)	Distance requirements are measured radially from the leading edge of the sign face.	The petitioner's submitted site plan survey prepared by Greenleaf Surveying Company (dated 28 OCT 2013) appears to observe this standard.
1359.02(H)	No billboard sign may be located on top of, cantilevered over or otherwise suspended above any building or structure.	The proposed sign location and design appears to observe this standard.
1359.02(I)	A billboard sign having more than on surface display area which are tandem (side-by-side) or stacked (on above the other) are considered two billboards and are prohibited.	The proposed sign design appears to observe this standard.
1359.02(J)	Illumination.	See comments below under Article 1359.03.
1359.02(K)	Appearance.	Staff will recommend related conditions.
1359.02(L)	Permitting.	Staff will recommend related conditions.
1359.02(M)	Other Applicable Requirements and Laws.	Staff will recommend related conditions.
1359.03(A)	In addition to the spacing and setback standards addressed above, digital/electronic billboard signs may not be located on the same site as a National Register designated historic structure or within a National Register designated historic district. Digital / electronic billboard signs may not be located within 500 feet of a National Register designated historic structure, except where a federal interstate highway separates the digital / electronic billboard sign from said historic structure.	In a letter dated 24 OCT 2013, the petitioner confirms that there are not historic structures or districts within 500 feet of the proposed billboard sign location.
1359.03(B)	Display.	Staff will recommend related conditions.
1359.03(C)	The BZA may require, as a reasonable condition, that an approved digital billboard sign be turned off or display a "full black" image during nighttime hours to preserve the character and repose of adjacent residential areas.	Staff will recommend that the BZA discuss the merits of whether or not a related condition should be considered.
1359.03(D)	Secure electronic communication network.	Staff will recommend related conditions.
1359.03(E)	Agreement with the City concerning public service announcements for significant public interest related to safety and traffic matters.	The petitioner submitted information concerning Formetco's Automated Amber Alert Program capabilities to confirm the ability of the proposed sign to observe this standard.

The following table identifies the conditional use application requirements provided in Article 1359.04.

Article 1359.04	Requirement	Observation
(A)	Certified land survey prepared by an engineer or surveyor licensed to practice in West Virginia that shows the following:	The petitioner submitted a site plan survey prepared by Greenleaf Surveying Company (dated 28 OCT 2013) and certified by Allan J. Witschi, P.S. No. 587.
(A)(1)	The parcel boundaries for the property on which the proposed sign is to be located.	Included in said survey.
(A)(2)	The right-of-way boundary of the Federal Interstate Highway used to establish the applicable ISOD Overlay District.	Included in said survey.
(A)(3)	The exact location of the propose sign.	Included in said survey.
(A)(4)	The distances between the subject Federal Interstate Highway right-of-way, the property on which the proposed sign is to be located, and the exact location of the proposed sign…If only a portion of the parcel falls within the 500-foot ISOD Overlay District boundary, the survey must indicate which portions of the property fall within it, and which are outside the boundary.	Included in said survey.
(A)(5)	The location of any existing or proposed building, structures, and other on-premise pole or pylon and billboard signs on the subject property.	Included in said survey.
(A)(6)	Floodplain boundaries, as may be required by the City Engineer.	Floodplain review will be conducted during building permit application and review.
(B)	Additional information.	See observations below.
(B)(1)	A scaled photo simulation of the proposed on-premise pole or pylon sign or billboard sign from no less than two (2) points of view, the locations of which must be agreed to by the Planning Director.	Northbound and southbound approach photo simulations submitted by the petitioner. Additionally, “line of site” directions are provided on the site plan survey prepared by Greenleaf Surveying Company (dated 28 OCT 2013).
(B)(2)	The proposed height, square footage, and construction details of the proposed sign.	Plans prepared by Selective Structures, LLC (dated 17 JAN 2010) and Formetco (dated 25 OCT 2013) submitted by the petitioner.
(B)(3)(a)	A map illustrating any and all billboard signs with 1,500 feet of the proposed billboard sign along with related distances.	According to the petitioner’s response to Finding of Fact No. 4, “There are no other billboards within 2,000+ feet.”

Article 1359.04	Requirement	Observation
(B)(3)(b)	A map illustrating the location of the proposed billboard and its proximity to the closest residential zoning district.	According to the petitioner's submitted site plan survey prepared by Greenleaf Surveying Company (dated 28 OCT 2013), the proposed location of the subject digital/electronic illuminated sign is 301 feet from the eastern edge of the "Controlled Access Right-of-Way for Interstate 68", which also adjoins the nearest R-1A District.

ORDINANCE NO. OBD13-10

AN ORDINANCE AMENDING ARTICLE 1329.02 "DEFINITIONS" OF THE CITY OF MORGANTOWN PLANNING AND ZONING CODE AS IT PERTAINS TO "BILLBOARD SIGN" AND "POLE SIGN".

The Morgantown City Council hereby ordains that Article 1329.02 "Definitions" of the City of Morgantown Planning and Zoning Code is amended as follows (deleted matter struck through; new matter underlined):

SIGN, BILLBOARD – An off-premise sign, usually of the pole or pylon sign type, for which a static message or copy on the sign can be changed manually (e.g. paint, paper, vinyl, etc.), mechanically (e.g. tri-action, etc.), or electronically (e.g. digital displays using LED or similar technology controlled via electronic communication through a secure network). Such signs are prohibited within the City, except as provided in Article 1359 "ISOD, Interstate Sign Overlay District" and Article 1369 "Signs".

SIGN, POLE – A sign that is mounted on a freestanding pole(s) or other support so that the bottom edge of the sign face is six feet or more above the grade. Such signs are prohibited within the City, except ~~within 500 feet of a Federal Interstate Highway~~ as provided in Article 1359 "ISOD, Interstate Sign Overlay District" and Article 1369 "Signs". Also called a PYLON SIGN.

This ordinance shall be effective upon date of adoption.

FIRST READING: February 5, 2013

ADOPTED: March 6, 2013

FILED: March 6, 2013

RECORDED: March 6, 2013

Mayor

Linda L. Kotte
City Clerk

EXHIBIT

1

exhibitsticker.com

ORDINANCE NO. ORD13-09

AN ORDINANCE PROVIDING FOR THE ELIMINATION OF THE "ISOD, INTERSTATE SIGN OVERLAY DISTRICT" FROM THE OFFICIAL ZONING MAP OF THE CITY OF MORGANTOWN SO THAT THE BOUNDARIES OF SAME MAY BE DEFINED AND DESIGNATED BY DESCRIPTION IN ARTICLE 1359 OF THE PLANNING AND ZONING CODE OF THE CITY OF MORGANTOWN AS SHOWN ON THE EXHIBIT HERETO ATTACHED AND DECLARED TO BE A PART OF THIS ORDINANCE AS IF THE SAME WAS FULLY SET FORTH HEREIN.

THE CITY OF MORGANTOWN HEREBY ORDAINS:

1. That the "ISOD, Interstate Sign Overlay District" shall be eliminated from the Official Zoning Map of the City of Morgantown in the manner described herein and illustrated on the exhibit hereto attached and declared to be a part of this Ordinance to be read herewith as if the same was fully set forth herein;

2. That the boundaries of the "ISOD, Interstate Sign Overlay District" shall be defined and designated by description in Article 1359 of the Planning and Zoning Code Zoning Code of the City of Morgantown; and,

3. That the Official Zoning Map of the City of Morgantown be accordingly changed to show said zoning map amendment.

This Ordinance shall be effective from the date of adoption.

FIRST READING: February 5, 2013

Mayor

ADOPTED: March 5, 2013

FILED: March 6, 2013

RECORDED: March 6, 2013

City Clerk

EXHIBIT

1

exhibitsticker.com

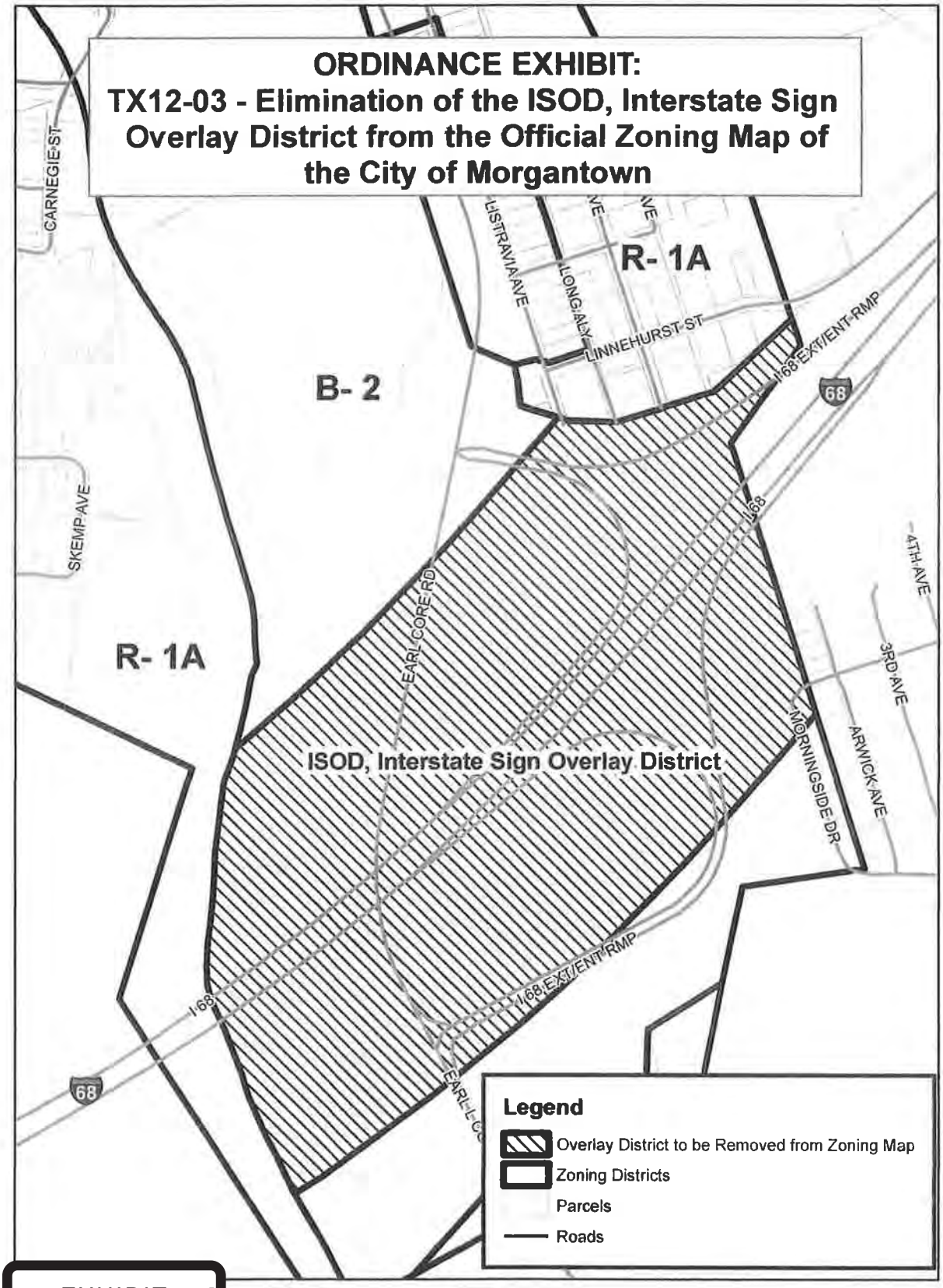

EXHIBIT

1

exhibitsticker.com

ORDINANCE NO. ORD 13-08

AN ORDINANCE AMENDING ARTICLE 1359 "ISOD, INTERSTATE SIGN OVERLAY DISTRICT" OF THE CITY OF MORGANTOWN PLANNING AND ZONING CODE.

The Morgantown City Council hereby ordains that Article 1359 "ISOD, Interstate Sign Overlay District" of the City of Morgantown Planning and Zoning Code be amended by replacing same in its entirety as follows (deleted matter struck through; new matter underlined):

ARTICLE 1359
ISOD, Interstate Sign Overlay District

~~1359.01 PURPOSE.~~

~~The purpose of the Interstate Sign Overlay District is to provide owners of property within 500 feet of a Federal Interstate Highway right-of-way the ability to erect pole or pylon signs, whether on or off premise in nature, for the convenience of the motoring public. This district may not be applied over any residentially zoned property.~~

~~1359.02 REGULATIONS.~~

~~(A) A conditional use permit shall be required for any pole or pylon sign, whether of the on-premise or off-premise variety.~~

~~(B) No more than one pole or pylon sign of any type may be located on a parcel.~~

~~(C) Off-premise pole or pylon signs shall not be located within 100 feet, measured radially, of any other off-premise pole or pylon sign. No such spacing limit shall apply to on-premise pole or pylon signs.~~

~~(D) Maximum sign height shall be determined by the Board of Zoning Appeals, after considering evidence supplied by the applicant that clearly demonstrates, to the satisfaction of the Board, that the requested height is necessary. The Board shall take into account the horizontal distance the sign will be from the travel lanes of the Interstate, the difference in elevation between the property grade and the highway grade, and the advice of the City Engineer and/or Planning Director. The Board may approve the height requested by the applicant, or any other height that it deems is warranted given the facts of the case.~~

~~(E) The maximum size of any pole or pylon sign, whether on- or off-premise in nature, shall not exceed 250 square feet, or whatever smaller size the Board of Zoning Appeals approves, considering the same criteria as for height. This shall be in addition to any other signs permitted by these regulations. The regulations~~

EXHIBIT
1
exhibitsticker.com

~~regarding computation of sign area for double-sided signs shall apply.~~

~~(F) As part of the conditional use application procedure for pole or pylon signs, the applicant shall provide a certified land survey prepared by an engineer or surveyor licensed to practice in West Virginia that shows the following:~~

~~(1) Parcel boundaries.~~

~~(2) Distance between the right of way of the Interstate Highway in question and the subject parcel. If the parcel is entirely contained within the 500-foot boundary, the survey shall so indicate. If only a portion of the parcel falls within the 500-foot zone, the survey must indicate which portions of the property fall within it, and which are outside of the boundary.~~

~~(3) The location of any existing or proposed buildings, structures, or other pole or pylon signs on the subject property.~~

~~(G) Utilizing the survey, the applicant shall then indicate:~~

~~(1) The exact location of the proposed sign; and~~

~~(2) The proposed height, square footage, and construction details of the proposed sign. Signs shall be designed by a licensed engineer and shall conform to the regulations of the West Virginia State Building Code.~~

~~(H) No permit for such signs shall be issued unless all existing non-conforming signs, of any type, on the subject property are first removed or brought into compliance with this ordinance.~~

1359.01 PURPOSE.

The purpose of the Interstate Sign Overlay District is to provide an area within 500 feet of a Federal Interstate Highway right-of-way within which on-premise pole or pylon signs or billboard signs may be erected for the convenience of the motoring public. This overlay district may not be applied over any residentially zoned property.

1359.02 GENERAL REGULATIONS.

(A) Conditional use approval by the Board of Zoning Appeals shall be required for on-premise pole or pylon signs and billboard signs.

(B) No more than one pole or pylon sign or billboard sign may be located on a parcel.

(C) Spacing.

(1) Billboard signs shall not be located within 1,000 feet of any other billboard sign. This distance requirement shall include in its calculation any billboards located outside the corporate boundaries of the City.

(2) Billboard signs shall not be located within 200 feet of a residential zoning

EXHIBIT

1

exhibitsticker.com

district. If illuminated by internal, external or digital/electronic means, said signs shall not be located within 300 feet of a residential zoning district.

(3) No such spacing limit shall apply for on-premise pole or pylon signs.

(D) Height. Maximum sign height for on-premise pole or pylon signs or billboard signs shall be determined by the Board of Zoning Appeals, after considering evidence supplied by the applicant that clearly demonstrates, to the satisfaction of the Board, that the requested height is necessary. The Board shall take into account the horizontal distance the sign will be from the travel lanes of the roadway, the difference in elevation between the property grade and the roadway grade, and the advice of the City Engineer and/or Planning Director. The Board may approve the height requested by the applicant, or any other height that it deems is warranted given the facts of the case.

(E) Area. The maximum area for on-premise pole or pylon signs shall not exceed 250 square feet; for billboard signs 450 square feet; or, whatever smaller area the Board of Zoning Appeals approves, considering the same criteria as for height. This shall be in addition to any other signs permitted by these regulations. For the purposes of this section, the surface display area of a pole or pylon sign or a billboard sign shall be measured to include the entire area within a regular geometric form or combinations thereof comprising all of the display area of the sign, including all of the elements of the matter displayed. Frames and structural members, excluding necessary supports or uprights, shall be included in computation of the surface display area. In the case of a sphere, spheroid, or similar shaped sign (e.g. a ball), the total surface display area shall be divided by two for determine the maximum surface display area permitted. The regulations regarding computation of sign area for double-sided and V-type signs in Article 1369 shall apply.

(F) Setback. No on-premise pole or pylon sign or billboard sign may be located within 15 feet of any parcel boundary line of the property on which the subject sign is located.

(G) Distance requirements provided in this section shall be measured radially from the leading edge of the sign face.

(H) No on-premise pole or pylon sign or billboard sign may be located on top of, cantilevered over or otherwise suspended above any building or structure.

(I) An on-premise pole or pylon sign or billboard sign having more than one surface display area which are tandem (side-by-side) or stacked (one above the other) are considered two billboards and are prohibited.

(J) Illumination. On-premise pole or pylon signs may only be internally illuminated. Billboard signs may be illuminated provided such illumination is consistent with

EXHIBIT

1

exhibitsticker.com

the requirements for a digital billboard as set forth herein, or is concentrated on the surface of said sign and is located so as to avoid glare or reflection onto any portion of an adjacent street or highway, the path of oncoming vehicles or any adjacent premises.

(K) Appearance.

(1) Except for time and temperature signs or digital billboards as otherwise regulated herein, all on-premise pole or pylon signs and billboard signs must be static or stationary and may not contain any visible moving parts, alternating or moving messages or have the appearance of having moving parts or messages. Provided, each message or copy displayed on a mechanically changed billboard sign (e.g., tri-action, etc.) shall remain fixed for at least ten (10) seconds; must accomplish the change between messages within an interval of two (2) seconds or less; and must contain a default design that will freeze the sign in one position if a malfunction occurs.

(2) Under no circumstances may any type of on-premise pole or pylon sign or billboard sign contain a message or display that appears to flash, undulate, pulse, move, scroll, or portray explosions, fireworks, flashes of light, or blinking lights or otherwise appears to move toward or away from the view, expand or contract, bounce, rotate, spine twist or make other comparable movements.

(3) The frames, borders, and all structural members of a billboard sign shall be black, with no illumination and no writing or symbols other than the identification (name and/or logo) of the sign owner/operator.

(L) Permitting. Every on-premise pole or pylon sign and billboard sign requires a City building permit before installation or modification. Permits shall be reviewed and issued consistent with the terms of this section as well as all other applicable ordinances of the City as amended from time to time. Every applicant for an on-premise pole or pylon sign or billboard sign shall file with the building permit application a certificate of insurance naming the City as coinsured and certifying that the applicant and City are insured against bodily injury and for property damage arising out of the erection, maintenance, repair, and replacement of the sign. Each applicant, if the permit is granted, shall be required to maintain said insurance and keep a certificate of insurance currently effective on file with the City so long as the sign is in existence. The certificate shall provide that the City shall receive ten (10) days written notice in case of cancelation of the policy. Any on-premise pole or pylon sign or billboard sign in violation of the insurance requirements of this section shall be removed immediately and the cost of such removal shall be charged against the owner/operator of the sign.

EXHIBIT

1

exhibitsticker.com

(M) Other Applicable Requirements and Laws. An on-premise pole or pylon sign or billboard sign must otherwise comply with all other relevant regulations and ordinances of the City and comply with all applicable provisions of federal and state law.

1359.03 DIGITAL OFF-PREMISE AND BILLBOARD SIGN REGULATIONS

The City recognizes that billboards are, by their nature, different in scope and purpose from other types of signage in the City. Billboards are significantly larger in size than other types of signage allowed in the City and their principal purpose is to dramatically attract the attention of the travelling public. The potential impact of a billboard on adjacent areas is significantly greater than other types of signage. Advancements in technology and efficiencies enable signs to change static message or copy electronically (e.g. utilizing an LED or digital type of sign). These newer technologies exacerbate the potential impact of a billboard in terms of adversely dominating the environment in which they operate due to light spillover and light pollution, unless regulated in a reasonable fashion. The intent of this section is to establish standards and regulations for billboards, including addressing those utilizing these newer technologies, in order to minimize the secondary effects that can accompany the unregulated display of these types of signs; preserve the character and repose of adjacent areas, with a principal focus on residential neighborhoods; protect property values in all areas of the City; and, reduce traffic and similar hazards caused by undue distractions.

(A) Locations. In addition to the spacing and setback standards provided in this section, digital or electronic billboard signs are prohibited on the same site as a National Register designated historic structure or within a National Register designated historic district. Digital or electronic billboard signs are prohibited within 500 feet of a National Register designated historic structure, except where a federal interstate highway separates the digital or electronic billboard sign from the National Register designated historic structure.

(B) Display.

(1) The display or message on a digital billboard sign may change no more frequently than once every ten (10) seconds. Any change in message or copy shall be completed instantaneously.

(2) The display, message, or copy must otherwise comply with subsection 1359.02(K) and the digital billboard sign must have a light sensing device to adjust brightness as ambient light conditions change in order to insure that the message meets the following brightness standard.

Maximum brightness levels for digital billboards shall not exceed 0.2 (two tenths) foot-candles over ambient light levels measured within 150 feet of the sign. Certification must be provided to the City demonstrating that the sign has been preset to automatically adjust the brightness to these levels

EXHIBIT

1

exhibitsticker.com

or lower. Certified re-inspection and recalibration shall be annually required by the City, in its reasonable discretion, at the sign owner/operator's expense to ensure that the specified brightness levels are maintained at all times.

(3) Brightness of digital billboards shall be measured as follows:

(a) At least 30 minutes following sunset, a foot-candle meter shall be used to obtain an ambient light reading for the location. This is done while the sign is off or displaying black copy. The reading shall be made with the meter aimed directly at the sign area at the pre-set location.

(b) The sign shall then be turned on to full white copy to take another reading with the meter at the same location.

(c) If the difference between the readings is 0.2 (two tenths) foot-candles or less, the brightness is properly adjusted.

(4) Consecutive messages on a single digital or electronic sign face (digital slots) are prohibited when the second message answers a textual question posed on the prior slot, continues or completes a sentence started on the prior slot, or continues or completes a story line started on the prior slot. Nothing in the subsection shall prohibit consecutive messages by the same advertiser or consecutive messages for the same product or service; provided, that the second of such advertisements does not answer a textual questions posed on the prior advertisement slot, continue or complete a sentence stared on the prior advertisement slot, or continue or complete a story line started on the prior advertisement slot. For example, consecutive advertisements by a single grocery store advertising the same or multiple products are permitted provided that such advertisements do not answer textual questions from one slot to the next slot, continue or complete a sentence from one slot to the next slot, or continue or complete a story line from one slot to the next slot.

(5) The sign shall have a default mechanism or setting that will cause the sign to turn off or show a "full black" image if a visible malfunction or failure occurs.

(6) The sign shall not be configured to resemble a warning or danger signal. The sign shall not resemble or simulate any lights or official signage used to control traffic.

(C) The Board of Zoning Appeals, in reviewing the conditional use application, may require, as a reasonable condition, that an approved digital billboard sign be turned off or display a "full black" image during nighttime hours to preserve the

EXHIBIT

1

exhibitsticker.com

character and repose of adjacent residential areas.

(D) The owner/operator of the digital billboard sign shall maintain a secure electronic communication network that controls the display and display changes.

(E) Prior to the issuance of a permit for construction of a digital billboard sign, the owner/operator of the sign shall enter into an agreement with the City providing for public service announcements or a regular basis without charge. Such announcements shall be provided as specified in the agreement and shall include messages of significant public interest related to safety and traffic matters (e.g. AMBER Alerts, Cop Killer Alerts, severe weather, disaster, evacuation bulletins/notices, etc.).

1359.04 CONDITIONAL USE APPLICATION

(A) As part of the conditional use application for on-premise pole or pylon signs and billboard signs, the applicant shall provide a certified land survey prepared by an engineer or surveyor licensed to practice in West Virginia that shows the following:

(1) The parcel boundaries for the property on which the proposed sign is to be located.

(2) The right-of-way boundary of the Federal Interstate Highway used to establish the applicable ISOD Overlay District.

(3) The exact location of the proposed sign.

(4) The distances between the subject Federal Interstate Highway right-of-way, the property on which the proposed sign is to be located, and the exact location of the proposed sign. If the parcel is entirely contained within the 500-foot ISOD Overlay District boundary, the survey shall so indicate. If only a portion of the parcel falls within the 500-foot ISOD Overlay District boundary, the survey must indicate which portions of the property fall within it, and which are outside of the boundary.

(5) The location of any existing or proposed buildings, structures, and other on-premise pole or pylon and billboard signs on the subject property.

(6) Floodplain boundaries, as may be required by the City Engineer.

(B) In addition to the survey, the applicant must submit the following:

(1) A scaled photo simulation of the proposed on-premise pole or pylon sign or billboard sign from no less than two (2) points of view, the locations of which must be agreed to by the Planning Director.

(2) The proposed height, square footage, and construction details of the proposed sign. Signs shall be designed by a licensed engineer and shall

EXHIBIT

1

exhibitsticker.com

conform to the regulations of the West Virginia State Building Code and design standards provided herein.

(3) If the proposed sign is a billboard sign, a map must be submitting illustrating the following:

(a) Any and all billboard signs within 1,500 feet, measured radially, of the proposed billboard sign location along with the distances between same.

(b) The distance of the proposed billboard sign, measured radially, to the closest residential zoning district.

This ordinance shall be effective upon date of adoption.

FIRST READING: February 5, 2013

ADOPTED: March 5, 2013

FILED: March 6, 2013

RECORDED: March 6, 2013

Mayor

City Clerk

EXHIBIT

1

exhibitsticker.com

ORDINANCE NO. OBD 13-13

AN ORDINANCE AMENDING ARTICLE 1369.10 "PROHIBITED SIGNS AND DEVICES" OF THE CITY OF MORGANTOWN PLANNING AND ZONING CODE AS IT PERTAINS TO BILLBOARD SIGNS.

The Morgantown City Council hereby ordains that Article 1369.10 "Prohibited Signs and Devices" of the City of Morgantown Planning and Zoning Code be amended as follows (new matter underlined):

1369.10 PROHIBITED SIGNS AND DEVICES.

All signs not expressly permitted under this Ordinance or exempt from regulation hereunder in accordance with the previous section are prohibited. Such signs include, but are not limited to:

(A) Any sign that copies or imitates an official sign or purports to have official status;

(B) Beacons;

(C) Windblown devices;

(D) Pennants, streamers, strings of light bulbs except for holiday decorations;

(E) Animated signs;

(F) Signs with moving or flashing lights, except as noted in the electronic scrolling message sign section. Neon signs may be used anywhere signs are permitted, except in residential districts, and provided they are one of the permitted types (wall, monument, etc.);

(G) Any sign attached to an accessory structure if such sign is legible from the public right-of-way or from other property;

(H) Any other attention-attracting device, except for those conforming to the dimensional, design, lighting and other standards applicable to a sign in the same location;

(I) Any sign that obstructs or substantially interferes with any window, door, fire escape, stairway, ladder, or opening intended to provide light, air, ingress, or egress to any building;

(J) Any sign attached to gas pumps or gas pump islands that can be read or understood from a public street by most persons of normal vision;

(K) Off-premise <u>and billboard</u> signs of any kind except those allowed under this section;

EXHIBIT

1

exhibitsticker.com

(L) Pylon signs, except those allowed under this section;

(M) Signs mounted on or above the roofline of any building, except in the B-4 districts, where they may be permitted as a conditional use and shall count towards the total sign allotment of the site; and

(N) Portable signs; and,

(O) Any sign located in a public right-of-way except as provided for in Section 1369.14.

This ordinance shall be effective upon date of adoption.

FIRST READING: February 5, 2013

ADOPTED: March 5, 2013

FILED: March 6, 2013

RECORDED: March 6, 2013

Mayor

Linda L Little
City Clerk

EXHIBIT

1

exhibitsticker.com

ORDINANCE NO. ORD 13-11

AN ORDINANCE AMENDING TABLE 1369.06.01 "PERMITTED SIGNS" OF THE CITY OF MORGANTOWN PLANNING AND ZONING CODE AS IT PERTAINS TO BILLBOARD SIGNS.

The Morgantown City Council hereby ordains that Table 1369.06.01 "Permitted Signs" of the City of Morgantown Planning and Zoning Code be amended as follows (new matter underlined):

Table 1369.06.01: Permitted Signs

SIGN TYPE	R-1, R-1A, R-2, R-3	B-1, B-2, B-5, PUD	I-1	B-4	OI, PRO	ISOD	Required Permits
Ground							
Directory	√	√	√	√	√	--	BP, FP, SP
Directional	√	√	√	√	√	--	BP, FP, SP
Menu Board	--	√	--	√	--	--	BP, FP, SP
Monument	√	√	√	√	√	--	BP, FP, SP
Post and Panel	--	√	√	√	√	--	BP, FP, SP
Pole or Pylon Sign	--	--	--	--	--	√	BP, FP, SP
Billboard Sign	--	--	--	--	--	√	BP, FP, SP
Sandwich Board	√	√	--	√	√	--	BP, FP, SP
Building							
Construction	√	√	√	√	√	--	SP, FP
Directory	√	√	√	√	√	--	BP, FP, SP
Electronic, scrolling message	--	√	√	--	---	--	BP, FP, SP
Marquee	--	√	--	√	--	--	BP, SP
Suspended	--	√	--	√	√	--	BP, SP
Temporary	√	√	√	√	√	--	FP, SP
Wall	√	√	√	√	√	--	BP, SP

EXHIBIT

1

exhibitsticker.com

Table 1369.06.01: Permitted Signs (cont.)							
Other							
Off Premise Sign	--	--	--	--	--	√	BP, FP, SP
Public Event Banner	√	√	√	√	√	--	BP, SP*

BP – building permit; required for signs costing more than $250 which includes labor and materials
FP - floodplain permit
SP - sign permit
* The manner of attachment may determine whether or not a BP is required.

This ordinance shall be effective upon date of adoption.

FIRST READING: February 5, 2013

ADOPTED: March 6, 2013

FILED: March 6, 2013

RECORDED: March 6, 2013

Mayor

Linda L Kelly
City Clerk

EXHIBIT
1
exhibitsticker.com

ORDINANCE NO. ORD 13-12

AN ORDINANCE AMENDING TABLE 1369.09.01 "FREESTANDING SIGN HEIGHT LIMITS" OF THE CITY OF MORGANTOWN PLANNING AND ZONING CODE AS IT PERTAINS TO BILLBOARD SIGNS.

The Morgantown City Council hereby ordains that Table 1369.09.01 "Freestanding Sign Height Limits" of the City of Morgantown Planning and Zoning Code be amended as follows (new matter underlined):

Table 1369.09.01: Freestanding Sign Height Limits (inches)

Sign Type	Residential Districts	Commercial Districts	Industrial Districts	OI & PRO District	ISOD District
Construction	48	48	48	48	
Directory, Logo/Name Directory, Detailed	48 60	48 60	48 60	48 60	
Menu Board	--	60	--	--	
Political	48	48	48	48	
Principal Ground	48	48	48	48	
Pole/<u>Pylon, Billboard</u>					*
Monument	72	72	72	72	

* To be determined by the Board of Zoning Appeals

This ordinance shall be effective upon date of adoption.

FIRST READING: February 5, 2013

ADOPTED: March 5, 2013

FILED: March 6, 2013

RECORDED: March 6, 2013

Mayor

City Clerk

EXHIBIT

1

exhibitsticker.com

$75.00 CK 5190

City of Morgantown, West Virginia

APPLICATION FOR TYPE IV SITE PLAN – CONDITIONAL USE

OFFICE USE	
CASE NO.	CU13-18
RECEIVED:	
COMPLETE:	

(PLEASE TYPE OR PRINT IN BLACK INK)

I. APPLICANT

Name:	MICRO OUTDOORS ADV, LLC	Phone:	
Mailing Address:	2 MILLER HILL RD (Street)	Mobile:	304-319-4141
	OSAGE (City) WV (State) 26543 (Zip)	Email:	SALES@MICROOUTDOOR.COM

II. AGENT / CONTACT INFORMATION

Name:	RUSS BONASSO	Phone:	
Mailing Address:	2 MILLER HILL (Street)	Mobile:	Same
	OSAGE (City) WV (State) 26543 (Zip)	Email:	

Mailings – Send all correspondence to (check one): ☒ Applicant OR ☐ Agent/Contact

III. PROPERTY

Owner:	MARSHALL BISHOP	Phone:	304-291-6980
Mailing Address:	1768 MILEGROUND RD (Street)	Mobile:	N/A
	Cyth. (City) WV (State) 26505 (Zip)	Email:	N/A

IV. SITE

Street Address (if assigned):	1974 HUNTERS WAY	Tax Map #:	44A	Parcel #:	10
Zoning:					
Lot Dimensions:	Width: Ft.	Depth: Ft.	Square Footage:	4.66 ACRES ~~ft.²~~	

Shape of Lot: ☐ Corner ☐ Interior ☐ Through ☐ Flag ☒ Irregular ☐ Non-conforming

Existing Use of Structure or Land:	SOUTHERN STATES RETAIL
Proposed Use of Structure of Land:	BUSINESS / RETAIL / FARM BILLBOARD ADVERTISING

Finance Office
Morgantown, WV 26505
(304) 284-7408

City of Morgantown, West Virginia

APPLICATION FOR
TYPE IV SITE PLAN – CONDITIONAL USE

OFFICE USE	
CASE NO.	CU13-18
RECEIVED:	
COMPLETE:	

V. STRUCTURE

Proposed Setbacks: Front: _____ ft. Rear: _____ ft. Side A: _____ ft. Side B: _____ ft.

Proposed Height of Structure: _____ No. of Proposed Off-Street Parking Spaces: _____

No. of Dwelling Units (if applicable): _____ No. of Bedrooms: _____ No. of Employees: _____

Square Footage of all Proposed Structures (please explain):

VI. SITE PLAN

A Site Plan (8 copies), drawn to scale, that includes the following elements must accompany the application if not provided above in Sections IV and V:

(a) The actual dimensions, size, square footage, and shape of the lot to be built upon as shown on an actual survey by a registered design professional licensed by the State of West Virginia.

(b) The exact sizes and locations on the lot of existing structures, if any;

(c) The location, square footage, and dimensions of the proposed structure or alteration;

(d) The location of the lot with respect to adjacent rights-of-way;

(e) The existing and proposed uses of the structure and land;

(f) The number of employees, families, housekeeping units, bedrooms, or rental units the structure is designed to accommodate;

(g) The location and dimensions of off-street parking and means of ingress and egress for such space;

(h) Height of structure;

(i) Setbacks;

(j) Buffer yard and screening, if applicable;

(k) Location of garbage collection area and screening;

(l) Location of existing and/or proposed signs, if applicable;

(m) Roadway typical detail for internal roadways, if applicable;

(n) Location and size of stormwater management facilities; and,

(o) Utility lines and easements, if applicable.

OFFICE USE	
CASE NO.	CU13-18
RECEIVED:	
COMPLETE:	

VII. SUPPLEMENTAL PLANS AND EXHIBITS

Applicants **MUST** also submit the following plans and exhibits, unless waived by the Planning Director:

(a) Drainage plan and drainage calculations that bear the name, address, signature and seal of a registered professional engineer licensed by the State of West Virginia, with floodplain zones clearly denoted, a typical of all swales, and a design of the drop inlets.

(b) If applicable, design of stormwater management facilities and drainage calculations that bear the name, address, and seal of a registered professional engineer licensed by the State of West Virginia that meet the requirements of the City Zoning Ordinance, the City Stormwater Management Ordinance, and all other applicable local, state and federal regulations.

(c) Parking and Landscaping Plan

(d) Sign Plan

(e) Approved WV Division of Highways Access Permit, if applicable

(f) Sediment and erosion control plan as approved by the West Virginia Department of Environment Protection and the City of Morgantown

(g) Approved State of West Virginia NPDES General Permit for Storm Water Associated with Industrial (Construction) Activity, if applicable

(h) A traffic impact study, if required by the City Engineer

(i) The Planning Director may require the applicant to submit additional information concerning the lot or neighboring lots to determine conformance with, and provide for the enforcement of, the City Zoning Ordinance.

(j) The Planning Director may require the applicant to submit, in the case of accessory structures or minor additions, dimensions shown on plans relating to the size of the lot and the location of the structure(s) thereon be based on an actual survey prepared a registered design professional licensed by the State of West Virginia.

Applicants submitting a conditional use application in accordance with Article 313.05 "Building Height and Use" within the B-4 General Business District **MUST** also submit the following analyses:

(a) An air flow analysis conducted by a licensed architect or profession engineer, describing the estimated impact of the proposed building on existing patterns of air flow in the general vicinity; and how those impacts may affect existing properties with a 300 foot radius of the site.

(b) An analysis of the impacts of the proposed building on sunlight distribution in the general vicinity, with special emphasis on predicting light blockage and shadow casting onto all properties with a 300 foot radius of the site. Such analysis shall be conducted by a licensed architect or professional engineer.

(c) An analysis of the potential of "stepping back" upper floors as a technique to avoid negative impacts with respect to light and airflow, and to minimize the canyon effect of non-recess tall buildings. Such analysis shall be conducted by a licensed architect or professional engineer.

(d) An infrastructure and traffic analysis predicting the impacts of the building on water, sewer, drainage, electrical and gas infrastructure, on transportation levels of service (including transit) for impacted streets, and on fire suppression capabilities of the city. Such analysis shall be conducted by a licensed architect or professional engineer.

City of Morgantown, West Virginia

APPLICATION FOR
TYPE IV SITE PLAN – CONDITIONAL USE

OFFICE USE	
CASE NO.	CU13-18
RECEIVED:	
COMPLETE:	

VIII. FINDINGS OF FACT

The Board of Zoning Appeals may grant the request only if each of the Conditional Use Findings of Fact Criteria is determined to be in the positive. Applicants must give their own responses to the criteria statements provided below.

This Conditional Use is within the fitting character of the surrounding area and is consistent with the spirit, purpose, and intent of the Zoning Ordinance, *because*,

1. Congestion in the streets is not increased, in that:

WILL NOT INCREASE TRAFFIC. BILLBOARD IS TO BE ALONG WV. RT. 7

2. Safety from fire, panic, and other danger is not jeopardized, in that:

STRUCTURE IS CERTIFIED by LICENSED WV. ENGINEER AND IS BUILT TO MEET OR EXCEED 2009 IBC

3. Provision of adequate light and air is not disturbed, in that:

THIS STRUCTURE WILL SIT by ITSELF ON 4+ ACRES and ON THE EDGE OF SOUTHERN STATES PARKING LOT WITH A 15' PROPERTY LINE SETBACK

4. Overcrowding of land does not result, in that:

THERE ARE NO OTHER Billboards WITHIN 2000+ FEET

5. Undue congestion of population is not created, in that:

SIGN DOES NOT INCREASE TRAFFIC FLOW. IT DISPLAYS TO EXISTING TRAFFIC ON RT 7 IT IS, HOWEVER, DESIGNED TO INCREASE CUSTOMER FLOW INTO LOCAL BUSINESSES.

City of Morgantown, West Virginia

APPLICATION FOR
TYPE IV SITE PLAN – CONDITIONAL USE

OFFICE USE	
CASE NO.	CU13-18
RECEIVED:	
COMPLETE:	

VIII. FINDINGS OF FACT (cont.)

6. Granting this request will not create inadequate provision of transportation, water, sewage, schools, parks, or other public requirements, in that:

AGAIN, Billboard ADVERTISES to existing TRAFFIC ON RT 7. THIS STRUCTURE IS IN NO WAY IMPEDING WATER, SEWER LINES. THERE ARE NO PARKS WITHIN VIEW. NO QUESTIONABLE OR OBSCENE ADS will be ALLOWED

7. Value of buildings will be conserved, in that:

This sign will Allow businesses on RT 7 and in and AROUND Mgtn, WV TO be exposed to THE public THAT MIGHT OTHERWISE MAY HAVE NO OTHER WAY TO LET A BUYER KNOW THEY EXIST

8. The most appropriate use of land is encouraged, in that:

THIS SIGN WILL HAVE THE Ability to CONVEY ABERT ALERTS, SILVER ALERTS and Valuable MESSAGES from STATE, FEDERAL AND COUNTY CAN OFFICIALS IF NEEDED.

IX. ATTEST

I hereby certify that I am the owner of record of the named property, or that this application is authorized by the owner of record and that I have been authorized by the owner to make this application as his/her authorized agent and I agree to conform to all applicable laws of this jurisdiction. I certify that the information submitted herein and attached hereto is true and accurate and understand that if found otherwise may result in the denial of this request or subsequent revocation of any and all related approvals. The undersigned has the power to authorize and does hereby authorize City of Morgantown representatives on official business to enter the subject property as necessary to process the application and enforce related approvals and conditions.

MICRO OUTDOORS ADV.	[signature]	5/25/13
Type/Print Name of Applicant/Agent	Signature of Applicant/Agent	Date

- **Conditional Use Petition Fee of $75 must accompany application**

LOT F
Kot Stapp, LLC
DB. 1346 / Pg. 683
TM. 44A-9

UNNAMED STREET

HUNTERS WAY (30')

OLD WV STATE ROUTE 7

WV STATE ROUTE 7

X 870. 7

LOT G
CJJB Real Estate, LLC
DB. 1346 / Pg. 688
TM. 44A-8

X 892. 5

X 869. 4

X 870. 1

PHASE III
1.0 ACRE ±
FUTURE DEVELOPMENT

X 870. 6

LOT "H"
4.622 ACRES

LINE OF SITE

LISTRAVA AVENUE

X 921. 3

X 892. 1

X 910. 5

PHASE II

X 873. 2

X 923. 6

CENTERLINE OF ROUTE 7

CREEK

161'

123'

LAY DOWN & BULK STORAGE AREA

X 875. 4

740'

right-of-way

INTERSTATE 68
PROJECT # APD-483(9)

X 897. 3

63' ground to bottom sign angle 59°30'

36+45

150'

173'

464'

301'

15'

CARTWAY OF ROUTE 7

C/A RW FENCELINE

X 869. 4

WV Department of Highways
DB. 790 / Pg. 173 &
DB. 719 / Pg. 606
Tract 74-2 (NON-C/A)

C/A right-of-way

WV Department of Highways
DB. 790 / Pg. 173 &
DB. 719 / Pg. 606
Tract 74-1 (C/A)

LINE OF SITE

X 928. 6

RAMP OF I-68

Development (Grid) North

CONTROLLED ACCESS (C/A)
RIGHT-OF-WAY
INTERSTATE 68
PROJECT # APD-483(9)

X 870. 8

RED NOTATIONS ADDED BY PLANNING DIVISION TO ASSIST BZA'S REVIEW

THIS SUBDIVISION HAS BEEN APPROVED BY THE MORGANTOWN PLANNING COMMISSION OR ASCERTAINED TO MEET THE MORGANTOWN SUBDIVISION REGULATIONS ON . . . . . ., 20 . . AND IS READY FOR RECORDING BY THE MONONGALIA COUNTY CLERK OF THE COURT.

Authorized agent . . . . . .

Title . . . . . .

GREENLEAF SURVEYING COMPANY
1215 GREENBAG ROAD
MORGANTOWN, WEST VIRGINIA 26508
304 / 291-1264

ALLAN J. WITSCHI, P.S. NO. 587

North

0' 100' 200'

Plat of Proposed sign location for
MICRO OUTDOORS ADV., LLC
description: Lot H of the Tin Mill Crossroads Development - Sabraton Site
addition ref.: Map Cabinet D, at File 26A, DB. 1346, at Pages 686 & 696 & DB. 1439, at Page 595.
area: 4.622 acres
title: Bruceton Farm Service, Inc. DB. 1439, at Page 592 Tax Map 44A, Parcel 10
Sixth Ward of Morgantown Corporation, Morgan District, Monongalia County, West Virginia.
address: 1974 Hunters Way, Morgantown, WV.
scale: 1" = 100'
date: August 9, 2013
date rev. October 11, 2013
date rev. October 28, 2013

file number 062-13

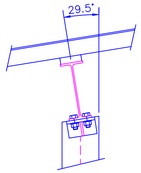

DETAIL A
N.T.S

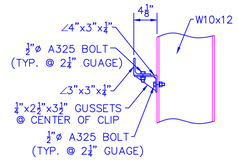

DETAIL F
N.T.S

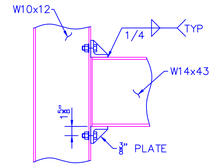

SECTION G–G
N.T.S

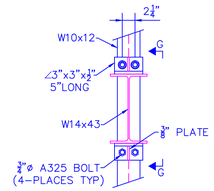

SECTION C–C
N.T.S

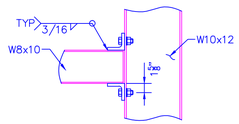

SECTION H–H
N.T.S

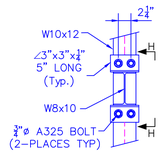

SECTION D–D
N.T.S

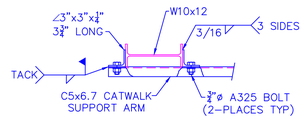

SECTION E–E
N.T.S

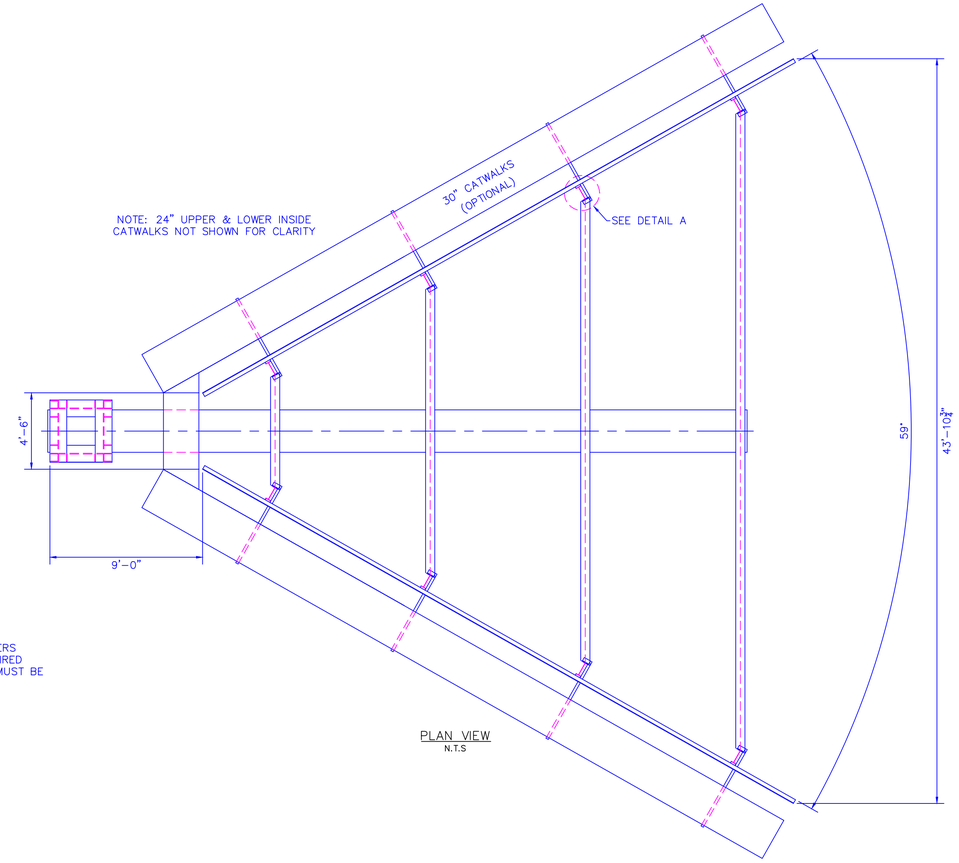

PLAN VIEW
N.T.S

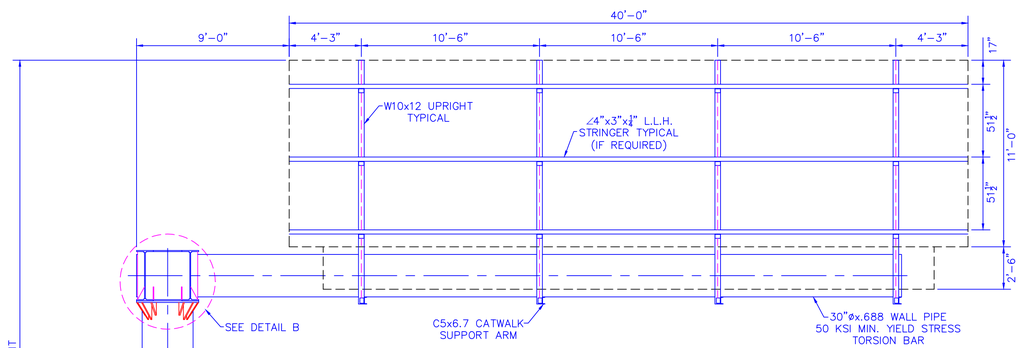

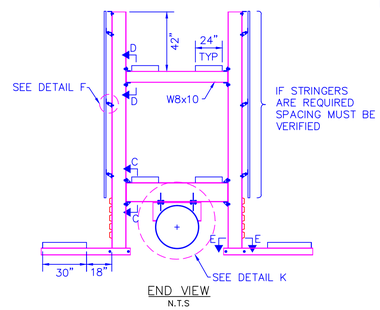

END VIEW
N.T.S

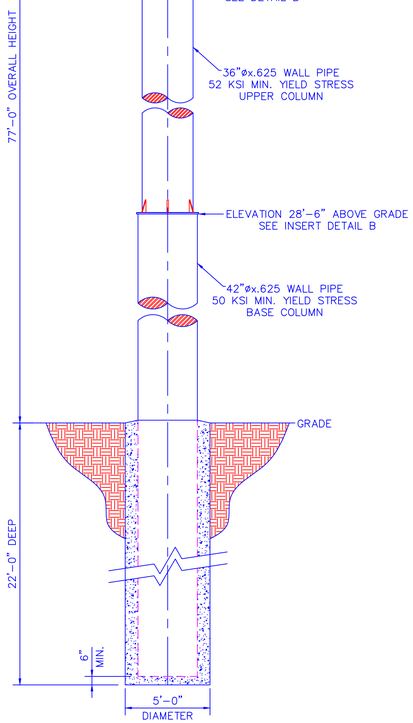

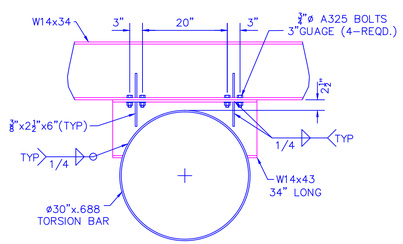

CUT HOLE IN SADDLE BEAM, SLEEVE TORSION
BAR THROUGH AND WELD ALL AROUND

DETAIL K
N.T.S

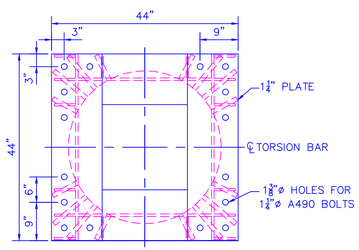

Note:
This unit has been designed to support
two l.e.d./or Trivision units weighing approx. 6,160# ea.
l.e.d./Trivision Attachments are designed by others.
Supports must be mounted within 18" of the
uprights, if not directly to uprights

NOTE:
THIS DRAWING IS PRELIMINARY AND NOT
FOR FABRICATION. ALL MEMBER AND
FOUNDATION SIZES ARE SUBJECT TO
CHANGE IN THE ENGINEERING PROCESS.

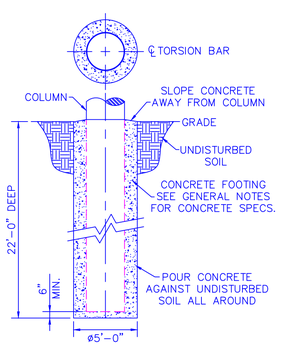

AUGERED FOOTING DETAIL
N.T.S

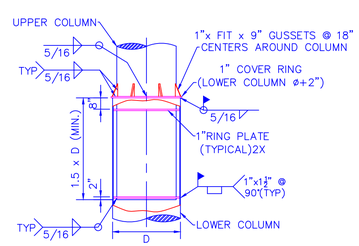

INSERT DETAIL B
N.T.S

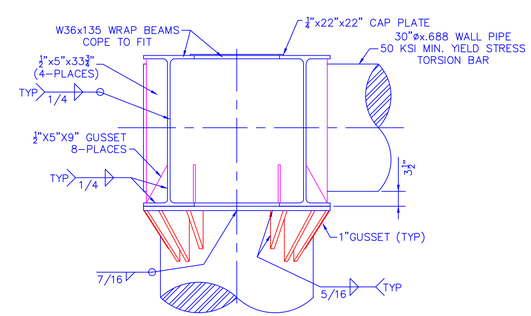

CUT HOLE IN WRAP BEAM, SLEEVE TORSION
BAR THROUGH AND WELD 1/4 FILLET ALL AROUND

DETAIL B
N.T.S

DRAWN BY:	*TGS*
DATE DRAWN:	*01-17-10*
SHEET #:	*1 OF 1*

Selective Structures, LLC
811 East Avenue
Athens, TN 37303

PROJECT
11'-0 x 40'-0", 9' Ext. Flag, 59Á V @ 77'-0" O.A.H.
w/(2) Digital Units Weighing Approx. 6,160# Ea
Located in: Morgantown, WV

PRODUCTION NOTES:
1) CABINET POWER PRE-WIRED BY COLUMN
2) TRIM COLOR - NO TRIM
3) SECTIONED MOUNTING CHANNELS
4) USE ½"-13 GRADE 5 SERRATED FLANGE BOLTS AND NUTS UNLESS OTHERWISE NOTED
5) ALL FABRICATED ALUMINUM AND STEEL PARTS TO BE PAINTED SATIN BLACK.

NO TRIM REQUIRED
PAINT SIDES OF END CABINETS
AND MOUNTING CHANNELS BLACK

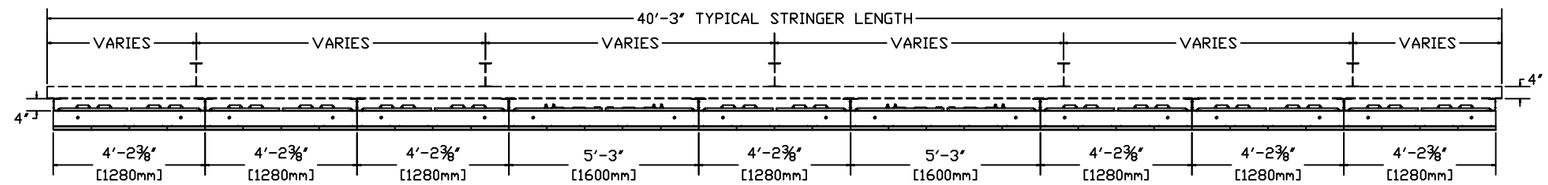

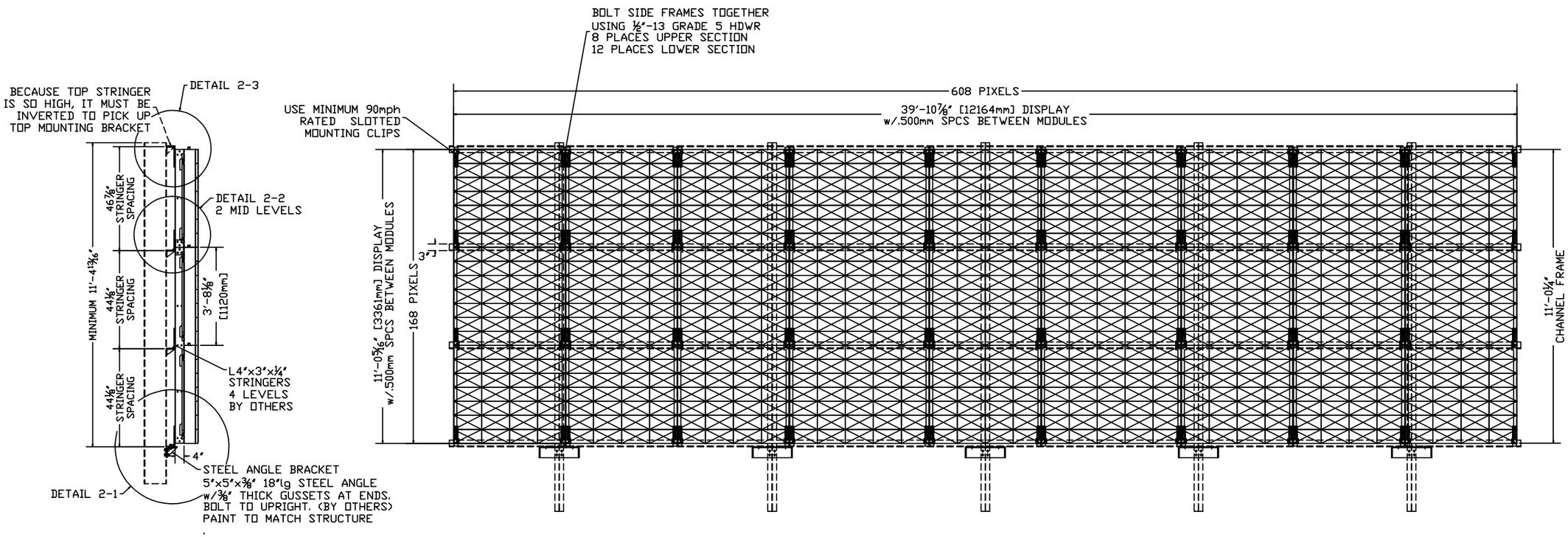

S.O.# _____ CUSTOMER NAME QTY=_
SIGN LOCATION: CITY, STATE

APPROXIMATE SIGN WEIGHT without TRIM

MOUNTING, CHNLS, STRINGERS	
MISC BRACKETS...	875#
ELECT SYSTEM.	150#
(20.167) 20mm ALUM LED MODULES..	3868#
CABLING..	102#
TOTAL	4,995#

REV	DESCRIPTION	DATE	APPD
-	- - - - -	--------	---

REVISIONS

THIS MATERIAL IS THE EXCLUSIVE CONFIDENTIAL PROPERTY OF FORMETCO, INC.
ALL RIGHTS, INCLUDING COPYRIGHT AND PATENT RIGHTS, ARE RESERVED BY FORMETCO, INC.
DO NOT COPY THIS DRAWING WITHOUT PERMISSION OF FORMETCO, INC.

PART NUMBER
— — — — —

APPROVALS

DWN RT	10/13
ENGRG UPDATED	10-25-13
CUSTOMER	

DO NOT SCALE THIS DRAWING.

FORMETCO
2963 Pleasant Hill Rd. Duluth, GA 30096-3808

CUSTOM 20mm 11'x40' COPY (nom.) LED DBB
FOUR STRINGER MTG @ 90 MPH

SIZE B | SCALE 1:50 | DWG NO. B-2148 | SH 1 OF 2 | REV. –

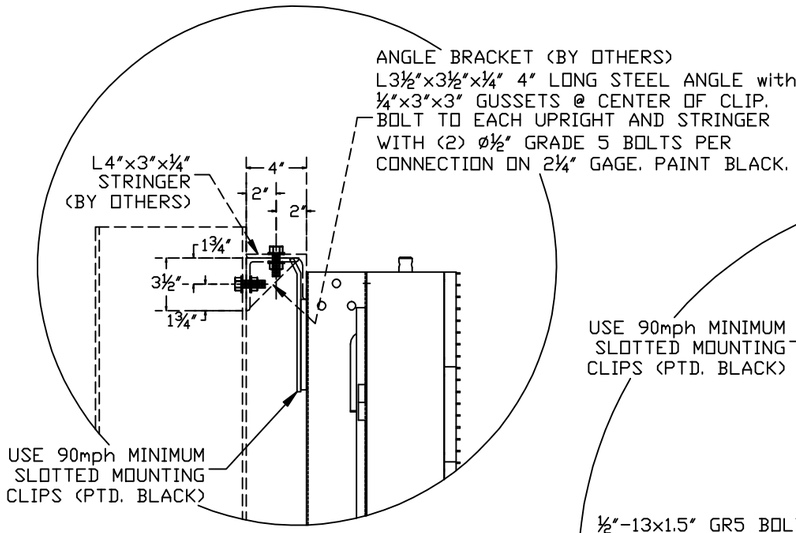

DETAIL 2-3
TOP SECTION COLUMN ATTACHMENT
ASSY IN FIELD BY OTHERS
SCALE 4X

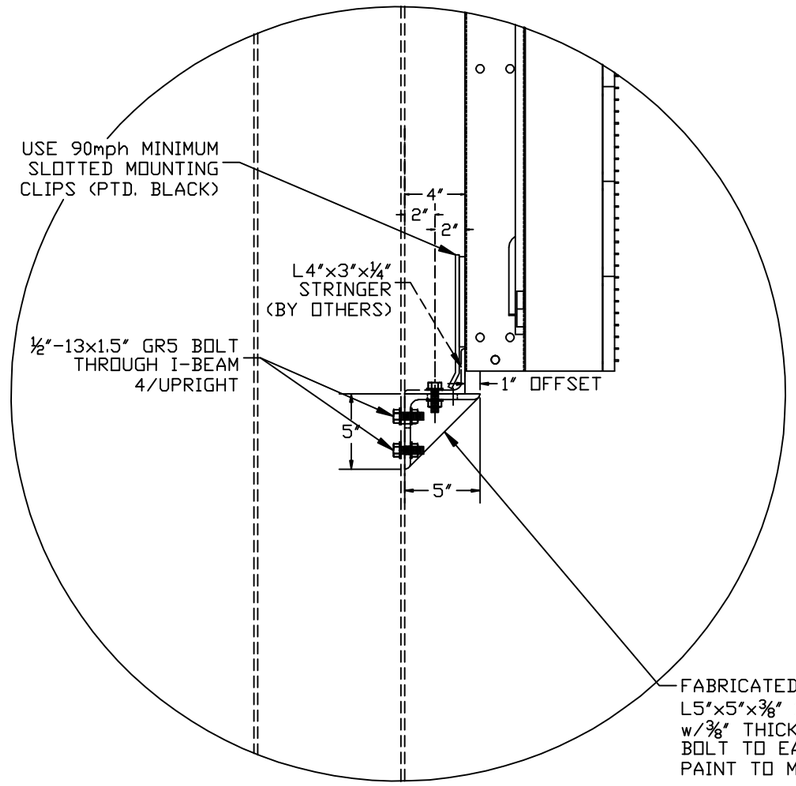

DETAIL 2-1
BOTTOM SECTION COLUMN ATTACHMENT
ASSY IN FIELD BY OTHERS
SCALE 4X

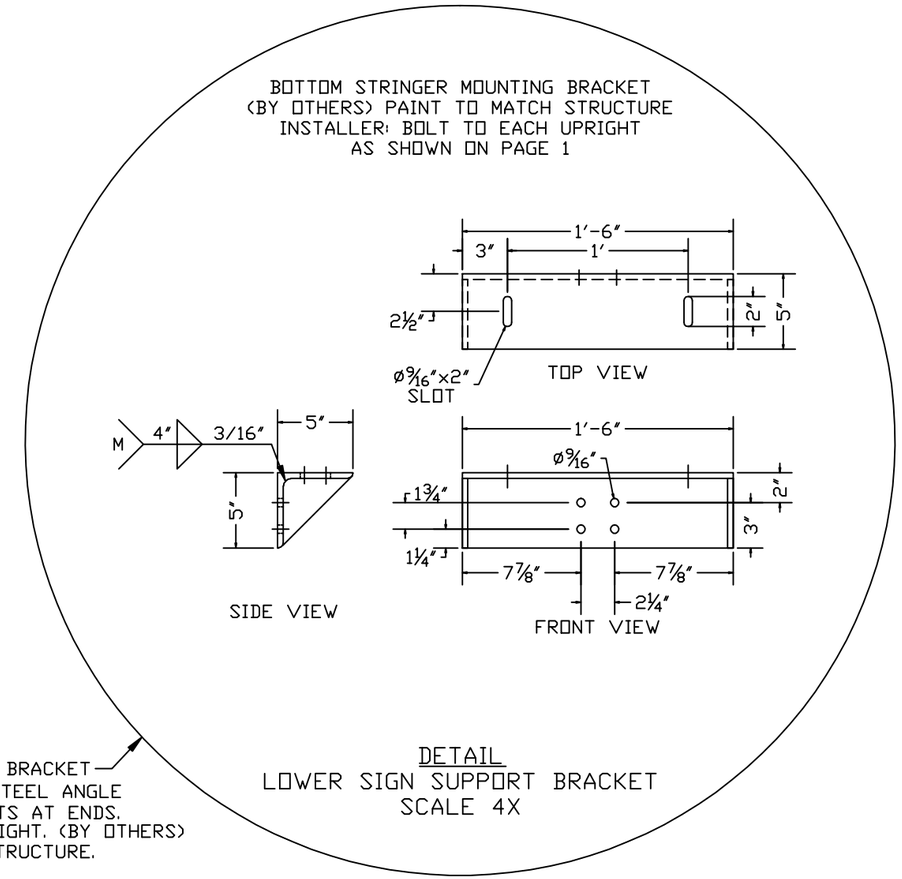

DETAIL
LOWER SIGN SUPPORT BRACKET
SCALE 4X

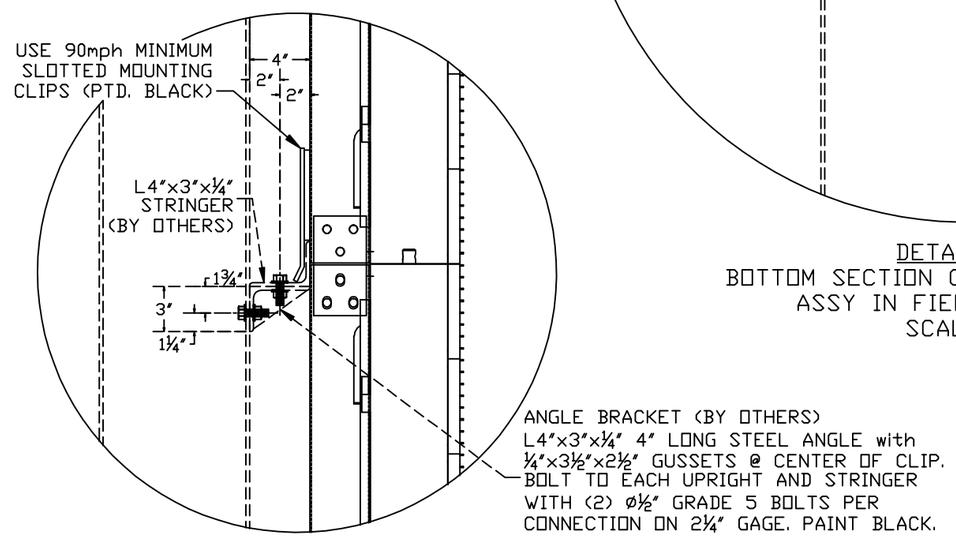

DETAIL 2-2
MIDDLE SECTION COLUMN ATTACHMENT
ASSY IN FIELD BY OTHERS
SCALE 4X

S.O.# _____ CUSTOMER NAME QTY = _
SIGN LOCATION: CITY, STATE

REV	DESCRIPTION	DATE	APPD
-	- - - - -	--------	---

REVISIONS

THIS MATERIAL IS THE EXCLUSIVE CONFIDENTIAL PROPERTY OF FORMETCO, INC.
ALL RIGHTS, INCLUDING COPYRIGHT AND PATENT RIGHTS, ARE RESERVED BY FORMETCO, INC.
DO NOT COPY THIS DRAWING WITHOUT PERMISSION OF FORMETCO, INC.

PART NUMBER
_ _ _ _ _

APPROVALS

DWN	RT	10/13
ENGRG	UPDATED	10-25-13
CUSTOMER		

DO NOT SCALE THIS DRAWING.

FORMETCO
2963 Pleasant Hill Rd. Duluth, GA 30096-3808

CUSTOM 20mm 11' x 40' COPY (nom.) LED DBB
FOUR STRINGER MTG CLIP DETAIL @ 90 MPH

SIZE	SCALE	DWG NO.	SH	OF	REV.
B	1:40	B-2148	2	2	-

CU13-18

CEFT

CU13-18

Micro OUTDOOR

www.microoutdoor.com

OCTOBER 24, 2013

MR. FLETCHER,

PER YOUR REQUEST OF ME ON WEDNESDAY, OCTOBER 23, 2013, I AM INFORMING YOU THAT THERE ARE NO HISTORICAL SITES OR DISTRICTS WITHIN FIVE HUNDRED FEET (500') OF MY PROPOSED BILLBOARD LOCATION AT 1974 HUNTERS WAY IN MORGANTOWN, WV.

I HAVE CHECKED WITH THE STATE AND HAVE BEEN INFORMED BY THEM AS WELL THAT THERE ARE NO HISTORICAL DISTRICTS OR WV BY WAYS WITH IN FIVE HUNDRED FEET (500') OF THE PROPOSED LOCATION.

SINCERELY,

RUSS BONASSO

MICRO OUTDOOR ADV.LLC

AUTOMATED AMBER ALERT PROGRAM

Formetco's Automated Amber Alert Program is a system that allows operators and schedulers to participate in the Amber Alert program without having to schedule alerts as they become active. To participate in the program, simply place the provided RTD (Real Time Data) file in your main schedule. The file activates as an Amber Alert is activated, based on the ZIP code of the display, and remains in the rotation for the life of the Alert.

Please verify the ZIP code is correct for each display before the following steps.

Step 1: Upload "production-amberalerts-rtd.rtd" in Control Center.

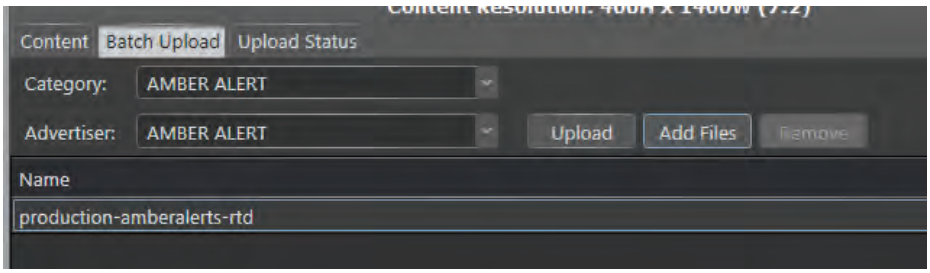

Step 2: Place "production-amberalerts-rtd.rtd" into your active schedule.

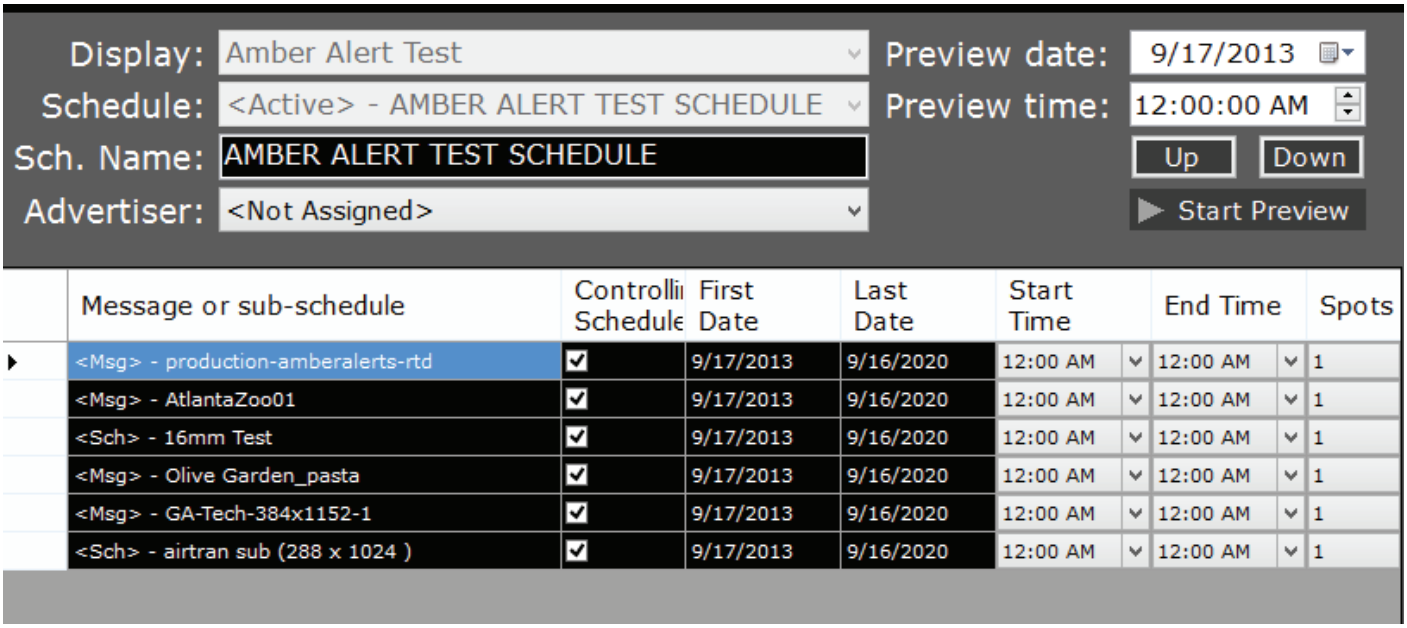

Step 3: Publish your schedule.

If there are no active Amber Alerts, the file will not play. Once an Amber Alert becomes active for the specified area, the file will begin to rotate, adding a new slot to your rotation for the life of the Amber Alert.

If you have any questions or would like help in setting up the Automated Amber Alert Program, please contact Formetco Service (LEDService@formetco.com).

FORMETCO

POWERED BY AdTech